MERCURY Precision Parts

QUICKSILVER® Marine Parts & Accessories

PARTS CATALOG

MERC 200

SERIAL NUMBER

200 . . . . . 3226958 THRU 3537530

90-61797

© Mercury Marine 2002

REVISED 03-01-1976

TABLE OF CONTENTS:

BOTTOM COWL ASSEMBLY 36
CARBURETOR ASSEMBLY 14
CARBURETOR CHOKE LINKAGE 18
CLAMP AND SWIVEL BRACKET ASSEMBLY 38
CRANKSHAFT AND CENTER MAIN BEARING ASSEMBLY 30
CYLINDER BLOCK AND CRANKCASE ASSEMBLY 26
DRIVE SHAFT HOUSING ASSEMBLY 42
FLYWHEEL AND IGNITION COIL 8
FUEL PUMP AND FUEL LINE ASSEMBLY 20
GEAR HOUSING ASSEMBLY, COMPLETE (PAGE 1) 44
GEAR HOUSING ASSEMBLY, COMPLETE (PAGE 2) 48
MISCELLANEOUS PARTS/ACCESSORIES 1
PARTS INDEX 52
PISTON AND CONNECTING ROD ASSEMBLY 32
SHIFT CONTROL LINKAGE 22
STARTER ASSEMBLY 4
STATOR AND IGNITION COMPONENTS 10
STEERING HANDLE ASSEMBLY 34
THROTTLE CONTROL LINKAGE 24
TOP COWL, WRAP AROUND COWL AND FRONT COVER 2

NOTE: *Indented description indicate that these parts are included in preceeding assembly.*

AR = As Required
OPT = Optional
NSS = Not Sold Separate
NS = Not Shown

THESE PARTS BOOKS/FICHE CARD ARE COPYRIGHTED AND MAY NOT BE DISTRIBUTED OR REPRODUCED IN ANY OTHER FORMAT BY ANYONE OTHER THAN MERCURY MARINE WITHOUT THE PRIOR WRITTEN CONSENT OF MERCURY MARINE.

MISCELLANEOUS PARTS/ACCESSORIES

REF. NO.	PART NO.	SYM.	QTY.	DESCRIPTION
-	90-61797		0	MERC 200 PARTS LIST
-	27-45088A4		0	GASKET SET
-	37-61000A72		0	DECAL SET (ENGINE)
-	48755A1		0	FLUSHING ASSEMBLY
-	92-25234--1		0	GLUE (BLANKET ADHESIVE)
-	46-48749A3		0	HEAVY DUTY WATER PUMP ASSEMBLY
-	50-47216A2		0	ELECTRIC STARTER MOTOR ASSEMBLY

TOP COWL, WRAP AROUND COWL AND FRONT COVER

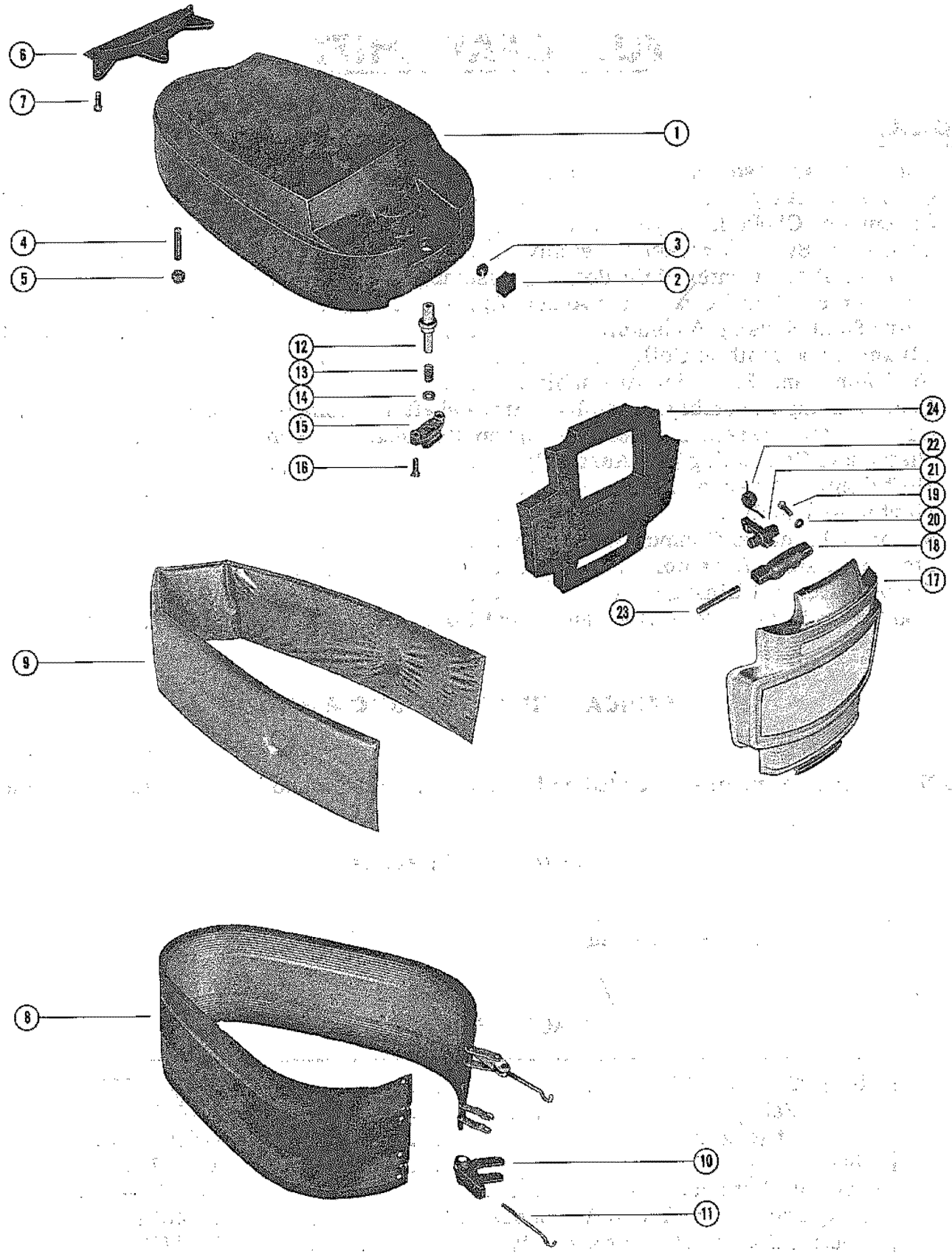

TOP COWL, WRAP AROUND COWL AND FRONT COVER

REF. NO.	PART NO.	SYM.	QTY.	DESCRIPTION
1	2130-4361A2		1	TOP COWL ASSEMBLY
2	58657		1	INSERT, ROPE GUIDE - TOP COWL
3	53-58656		1	RING, RETIAINING - ROPE GUIDE TO TOP COWL
4	16-21553		3	STUD, TOP COWL TO MOUNTING BRACKETS (1 1/2")
5	11-35814		3	NUT, TOP COWL STUD
6	39400		1	SHIELD, REAR - TOP COWL
7	10-37370		3	SCREW< REAR SHIELD TO TOP COWL (5/8")
8	2133-2706A5		1	WRAP AROUND COWL ASSEMBLY, COMPLETE
9	39606		1	BLAKNET, SOUND ABSORBING - WRAP AROUND COWL
10	46785A1		2	COWL LATCH ASSEMBLY
11	30413		2	HOOK, COWL LATCH FASTENING
12	39628		1	BUTTON, FRONT COVER RELEASE - TOP COWL
13	24-20099		1	SPRING, COMPRESSION - FRONT COVER RELEASE BUTTON
14	12-29245		1	WASHER, FRONT COVER RELEASE BUTTON
15	60865		1	CATCH, FRON COVER - TOP COWL
16	10-22523		2	SCREW, FRONT COVER LATCH TO TOP COWL (3/4")
17	2727-2666A8		1	FRONT COVER ASSEMBLY, COMPLETE
18	60867A1		1	BASE ASSEMBLY, FRONT COVER LATCH
19	10-48409		2	SCREW, LATCH BASE TO FRONT COVER (5/8")
20	12-26014		AR	WASHER, LATCH BASE SCREW
21	60866		1	HOOK, FRONT COVER LATCH
22	24-39598		1	SPRING, TORSION - FRONT COVER LATCH HOOK
23	17-39599		1	PIN, PIVOT - FRONT COVER LATCH HOOK
24	39936		1	BLANKET, SOUND ABSORBING - FRONT COVER

STARTER ASSEMBLY

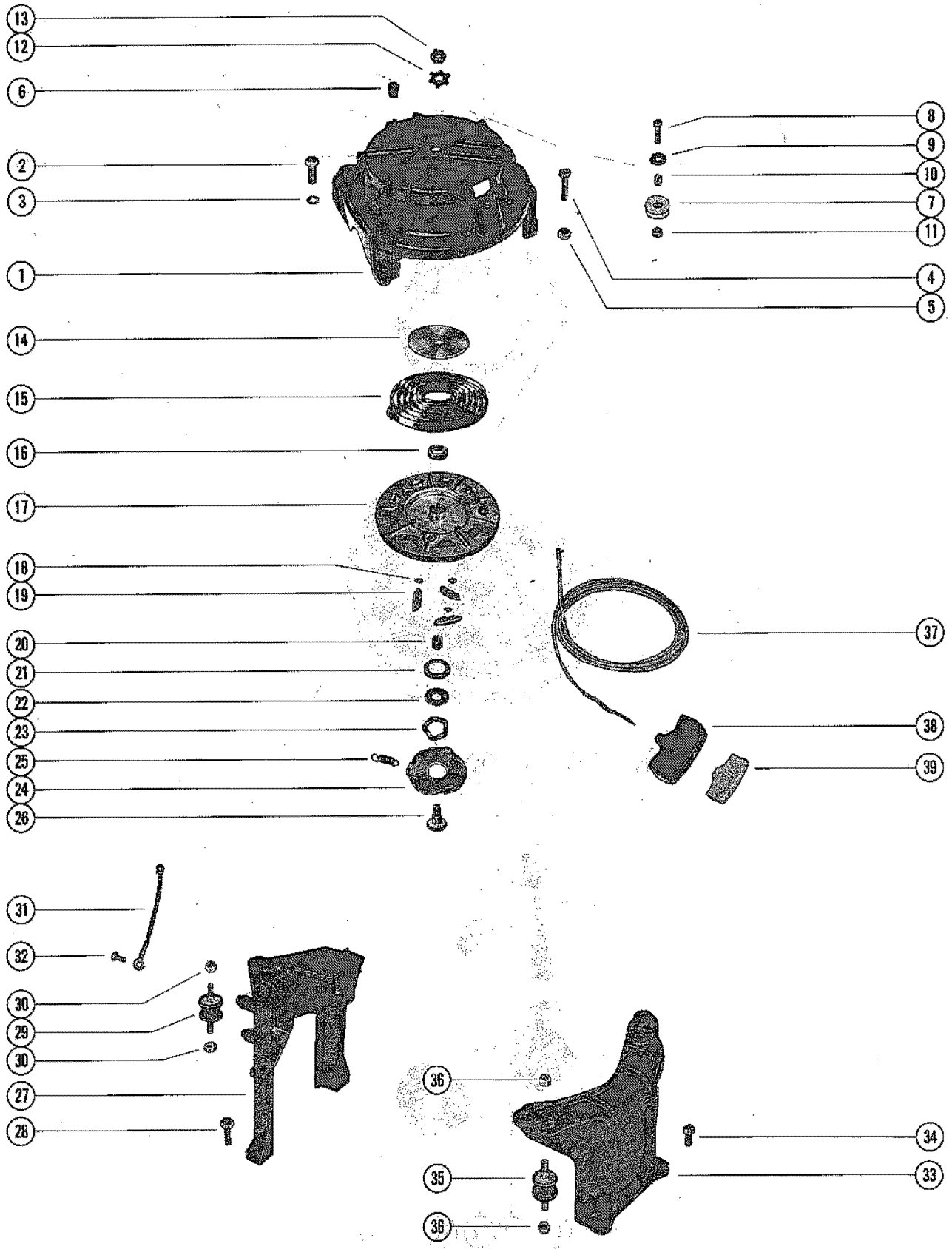

STARTER ASSEMBLY

REF. NO.	PART NO.	SYM.	QTY.	DESCRIPTION
1	57031A2		1	HOUSING ASSEMBLY, STARTER
2	10-37562		1	SCREW, STARTER HOUSING TO CYLINDER BLOCK (1")
3	13-26993		1	LOCKWASHER< STARTER HOUSING TO CYLINDER BLOCK SCREW
4	10-24644		1	SCREW, STARTER HOUSING TO CRANKCASE (1 3/8")
	10-22659		1	SCREW, STARTER HOUSING TO CRANKCASE (1 5/8")
5	11-20361		2	NUT, STARTER HOUSING TO CRANKCASE SCREW
6	47430		1	BUMPER, RUBBER - STARTER HOUSING
7	55860		1	PULLEY, STARTER CABLE
8	10-37892		1	SCREW, PULLEY TO STARTER HOUSING (1")
9	53111		1	RETAINER, PULLEY SCREW
10	23-30977		1	SPACER, PULLEY SCREW
11	11-20110		1	NUT, PULLEY SCREW
12	14-20165		1	TAB WASHER, SHEAVE SHAFT NUT
13	11-20166		1	NUT, SHEAVE SHAFT (LEFT HAND THREAD)
14	20155		1	RETAINER, STARTER SPRING
15	24-29340A1		1	SPRING, STARTER REWIND
16	23-20159		1	BUSHING, SPRING GUIDE
17	50-45952		1	STARTER SHEAVE ASSEMBLY
18	13-29720		3	WASHER, WAVE - STARTER PAWL
19	20162		3	PAUL, STARTER
20	23-45482		1	SPACER, SHEAVE SHAFT
21	26179		1	RETAINER, STARTER SHEAVE TO PLATE
22	12-35559		1	WASHER, STARTER SHEAVE RETAINER
23	13-20160		1	WASHER, WAVE - STARTER SHEAVE TENSION
24	20164		1	PLATE< RETAINER - STARTER PAWL
25	24-45823		1	SPRING, PAUL RETAINER PLATE
26	45481		1	SHAFT, SHEAVE
27	56305		1	BRACKET, MOUNTING - TOP COWL (REAR)
28	10-37562		2	SCREW, REAR MOUNTING BRACKET TO BOTTOM COWL (1")
29	57927		1	MOUNT, RUBBER - REAR MOUNTING BRACKET TO CYLINDER BLOCK
30	11-20361		2	NUT, RUBBER MOUNT TO BRACKET AND CYLINDER BLOCK
31	397-421A3		1	GROUND WIRE ASS'Y, MOUNTING BRACKET TO STARTER HOUSING
32	10-30663		1	SCREW, GROUND WIRE TO MOUNTING BRACKET (3/8")
33	47422		1	BRACKET< MOUNTING - TOP COWL (FRONT)
34	10-37562		2	SCREW, FRONT MOUNTING BRACKET TO BOTTON COWL (1")

CONTINUED ON NEXT PAGE ➠

STARTER ASSEMBLY

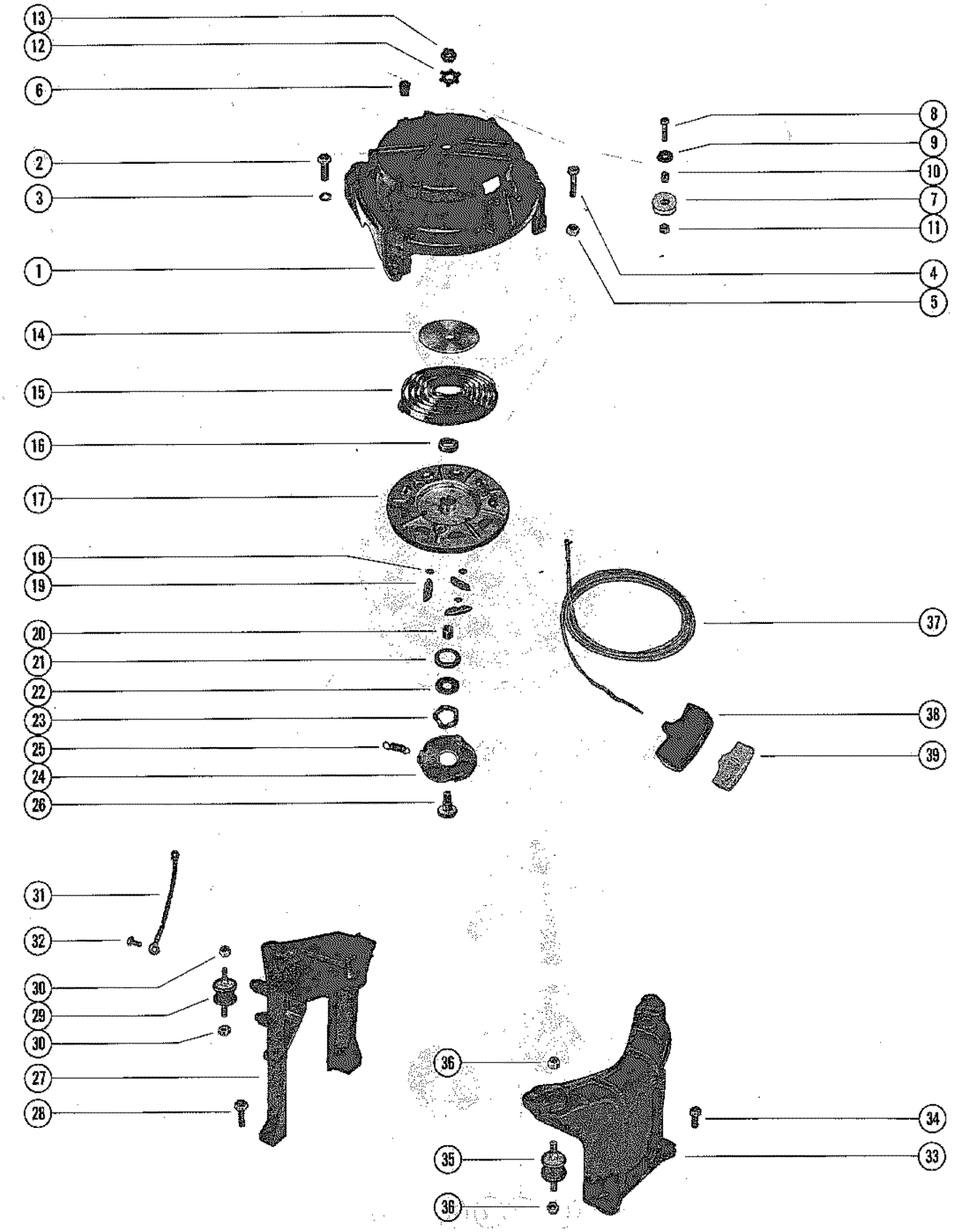

STARTER ASSEMBLY

REF. NO.	PART NO.	SYM.	QTY.	DESCRIPTION
35	57927		2	MOUNT, RUBBER - FRONT MOUNTING BRACKET TO CRANKCASE
36	11-20361		4	NUT, RUBBER MOUNT TO BRACKET AND CRANKCASE
37	50-22791A1		1	STARTER CABLE ASSEMBLY
38	30782		1	HANDLE, STARTER CABLE
39	28748		1	RETAINER, STARTER CABLE AND HANDLE

FLYWHEEL AND IGNITION COIL

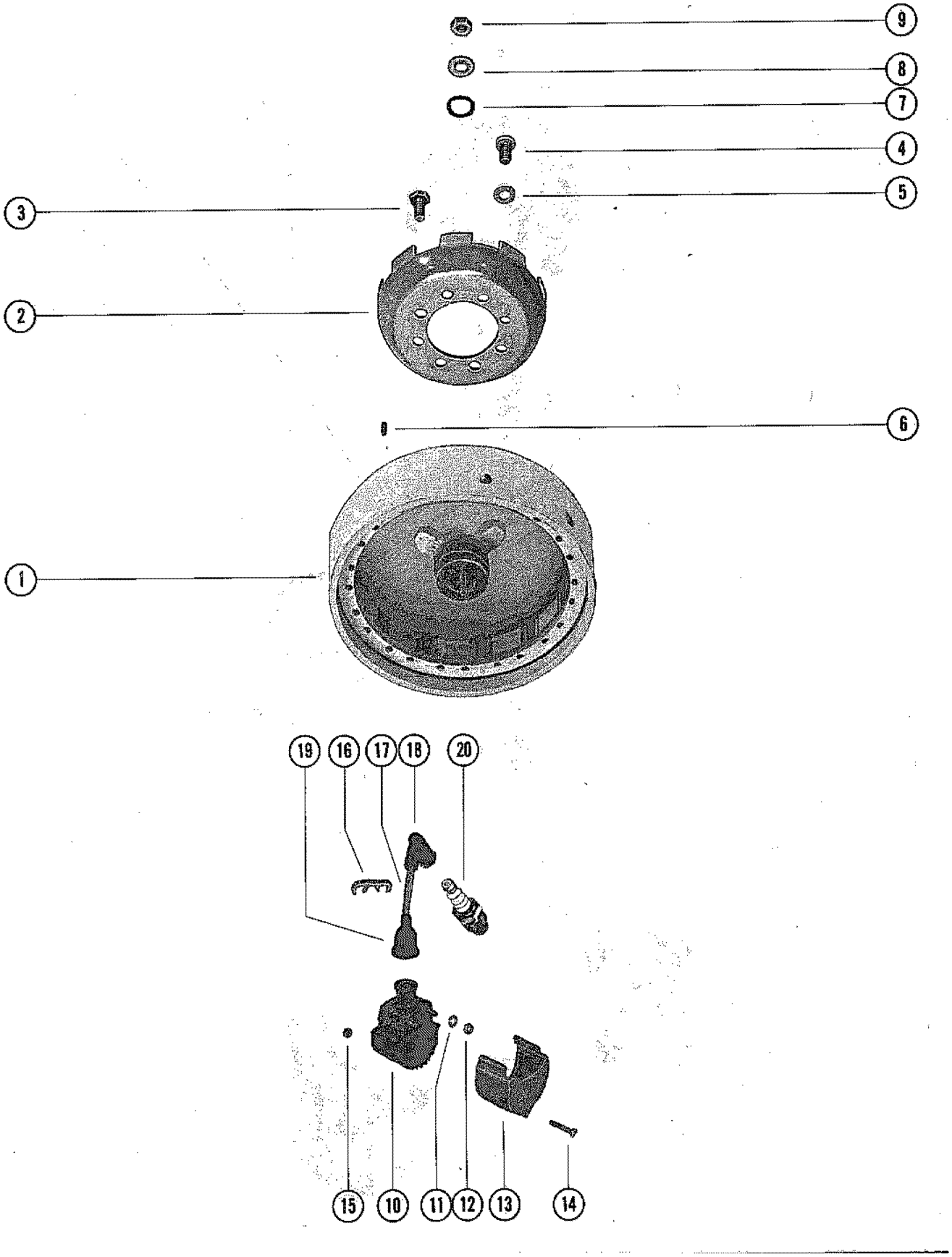

FLYWHEEL AND IGNITION COIL

REF. NO.	PART NO.	SYM.	QTY.	DESCRIPTION
1	237-4474A1		1	FLYWHEEL ASSEMBLY
2	50-33000A1		1	RATCHET ASSEMBLY, FLYWHEEL
3	10-35563		6	SCREW, RATCHET TO FLYWHEEL (9/16")
4	10-32417		8	SCREW, RATCHET TO FLYWHEEL (5/8")
5	13-26992		2	LOCKWASHER, RATCHET SCREW
6	28-20094		1	KEY, FLYWHEEL DRIVE
7	25-37340		1	"O" RING, FLYWHEEL NUT
8	12-36281		1	WASHER, FLYWHEEL NUT
9	11-22339		1	NUT, FLYWHEEL
10	336-4528A1		2	COIL ASSEMBLY, IGNITION
11	13-26996		4	LOCKWASHER, IGNITION COIL TERMINAL
12	11-45076		4	NUT, IGNITION COIL TERMINAL
13	61532		2	COVER, IGNITION COIL
14	10-61531		3	SCREW, COIL COVER TO REAR SUPPORT BRACKET (3 3/4")
15	11-20110		3	NUT, COIL COVER SCREW
16	54676		1	RETAINER, HIGH TENSION LEAD
17	47899A9		2	LEAD ASSEMBLY, HIGH TENSION
18	332-2854		2	NIPPLE, IGNITION COIL
19	47604A1		2	PROTECTOR ASSEMBLY, SPARK PLUG
20	33-58194		2	SPARK PLUG (AC#40FFK)

STATOR AND IGNITION COMPONENTS

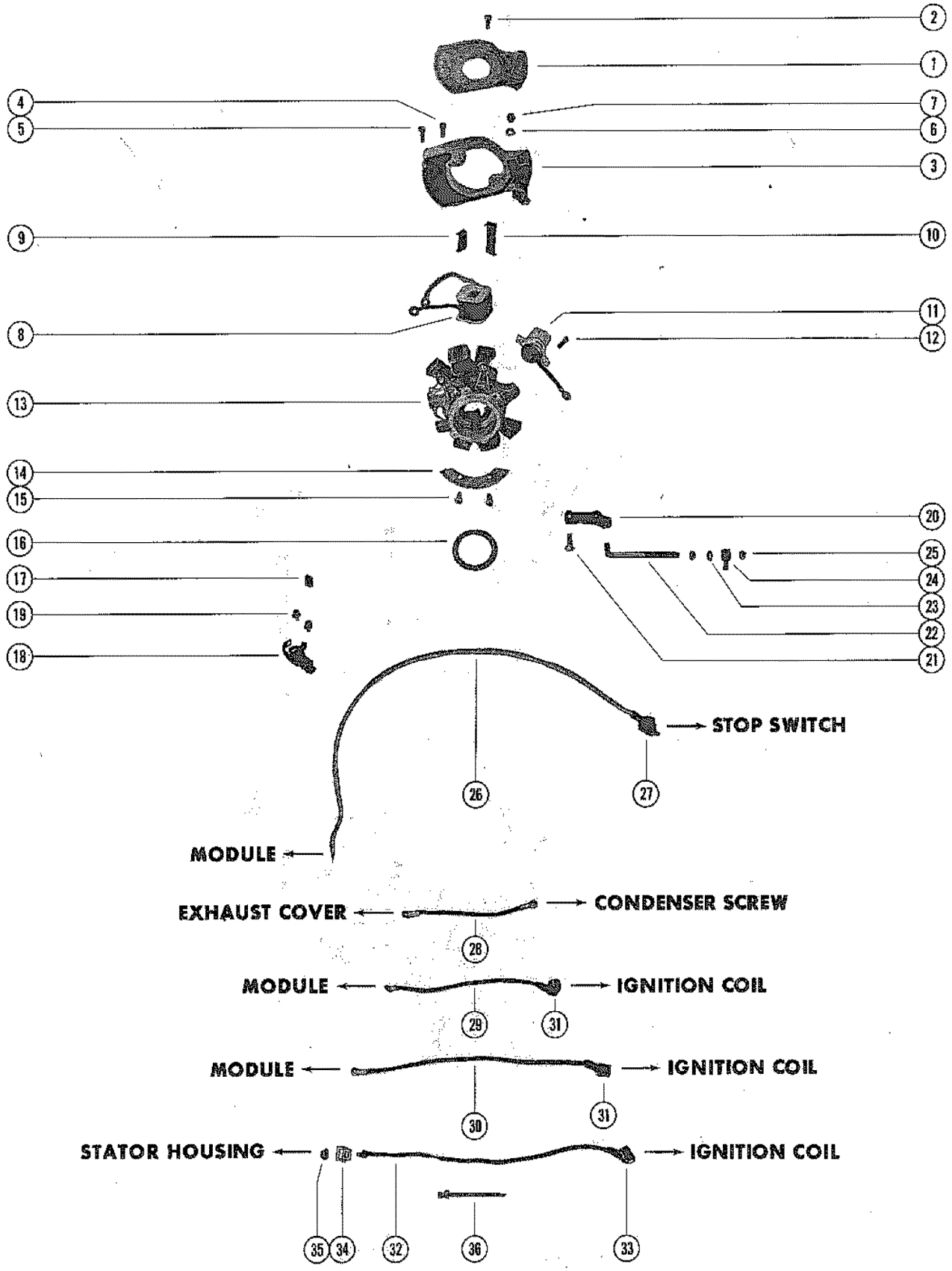

STATOR AND IGNITION COMPONENTS

REF. NO.	PART NO.	SYM.	QTY.	DESCRIPTION
1	336-4524A1		1	COVER ASSEMBLY
2	10-60491		2	SCREW, COVER TO MODULE (5/8')
3	336-4516A2		1	IGNITION MODULE ASSEMBLY
4	10-59800		2	SCREW< MODULE TO STATOR (9/16")
	10-59800		2	SCREW, MODULE TO STATOR (9/16")
	10-59800		2	SCREW, MODULE TO STATOR (9/16")
	10-59800		2	SCREW, MODULE TO STATOR (9/16")
	10-59800		2	SCREW, MODULE TO STATOR (9/16")
5	10-36046		3	SCREW, MODULE - COIL LEADS (1/4")
6	13-26996		2	LOCKWASHER, MODULE - IGNITION COIL LEAD TERMINALS
7	11-45076		2	NUT, MODULE - IGNITION COIL LEAD TERMINALS
8	336-4468A1		1	COIL, HIGH SPEED
	336-4467A1		1	COIL, LOW SPEED
9	54-59538		2	CLIP, COIL RETAINING
10	54-59539		2	CLIP, COIL RETAINING
11	336-4463		1	CONDENSER ASSEMBLY
12	10-62269		2	SCREW< CONDENSER ATTACHING (7/16")
13	336-4477A1		1	STATRO ASSEMBLY
14	336-4458		2	PLATE, STATOR HOLD DOWN
15	10-35400		4	SCREW, HOLD DOWN PLATE TO STATOR (7/16")
16	15-33910015		1	SHIM, STATOR PLATE TO UPPER END CAP
17	336-3989		1	WICK, CAM WIPER - STATER ASSEMBLY
18	336-4318A2		2	MAKER ASSEMBLY, STATOR HOUSING
19	10-56266		4	SCREW, MAKER TO STATOR HOUSING (3/8")
20	59710		1	BRACKET, LINK ROD TO STATOR PLATE
21	10-29722		2	SCREW, BRACKET TO STATOR (5/8")
22	59783		1	LINK, THROTTLE - STATOR ASSEMBLY
23	12-30164		1	WASHER, THROTTLE LINK
24	33973		1	SWIVEL, THROTTLE LINK
25	11-45812		2	NUT, THROTTLE LINK
26	56319A3		1	LEAD ASSEMBLY, STOP SWITCH (SALMON - 24 3/16")
27	59060		1	BOOT, LEAD ASSEMBLY
28	56757A1		1	JUMPER WIRE ASSEMBLY, CONDENSER TO EXHAUST COVER (BLACK - 6
29	56318A6		1	LEAD ASSEMBLY, MODULE TO IGNITION COIL (GREEN - 10 3/4")
30	56318A5		1	LEAD ASSEMBLY, MODULE TO IGNITION COIL (GREEN - 13 7/8")
31	38938		2	BOOT, LEAD ASSEMBLY
32	56316A3		1	CABLE ASSEMBLY, STATOR HOUSING (WHITE - 12 3/4")

CONTINUED ON NEXT PAGE ➠

STATOR AND IGNITION COMPONENTS

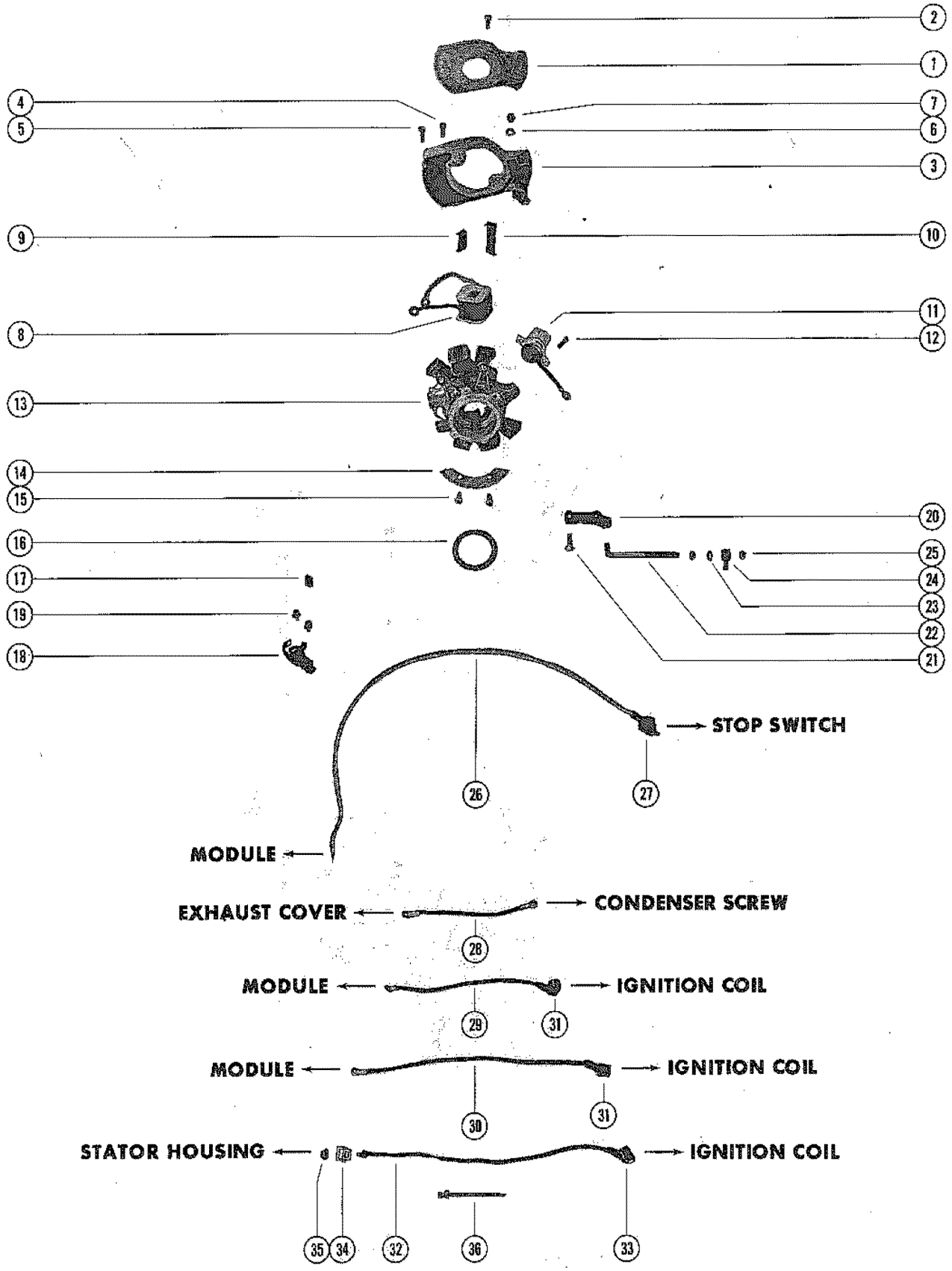

STATOR AND IGNITION COMPONENTS

REF. NO.	PART NO.	SYM.	QTY.	DESCRIPTION
32	56317A4		1	CABLE ASSEMBLY< STATOR HOUSING (BROWN - 16 1/4")
33	38938		2	BOOT, CABLE
34	336-4460		2	INSULATOR, CABLE TO CONTACT HOUSING
35	11-56325		2	NUT, CABLE INSULATOR
36	56762		2	STA-STRAP

CARBURETOR ASSEMBLY

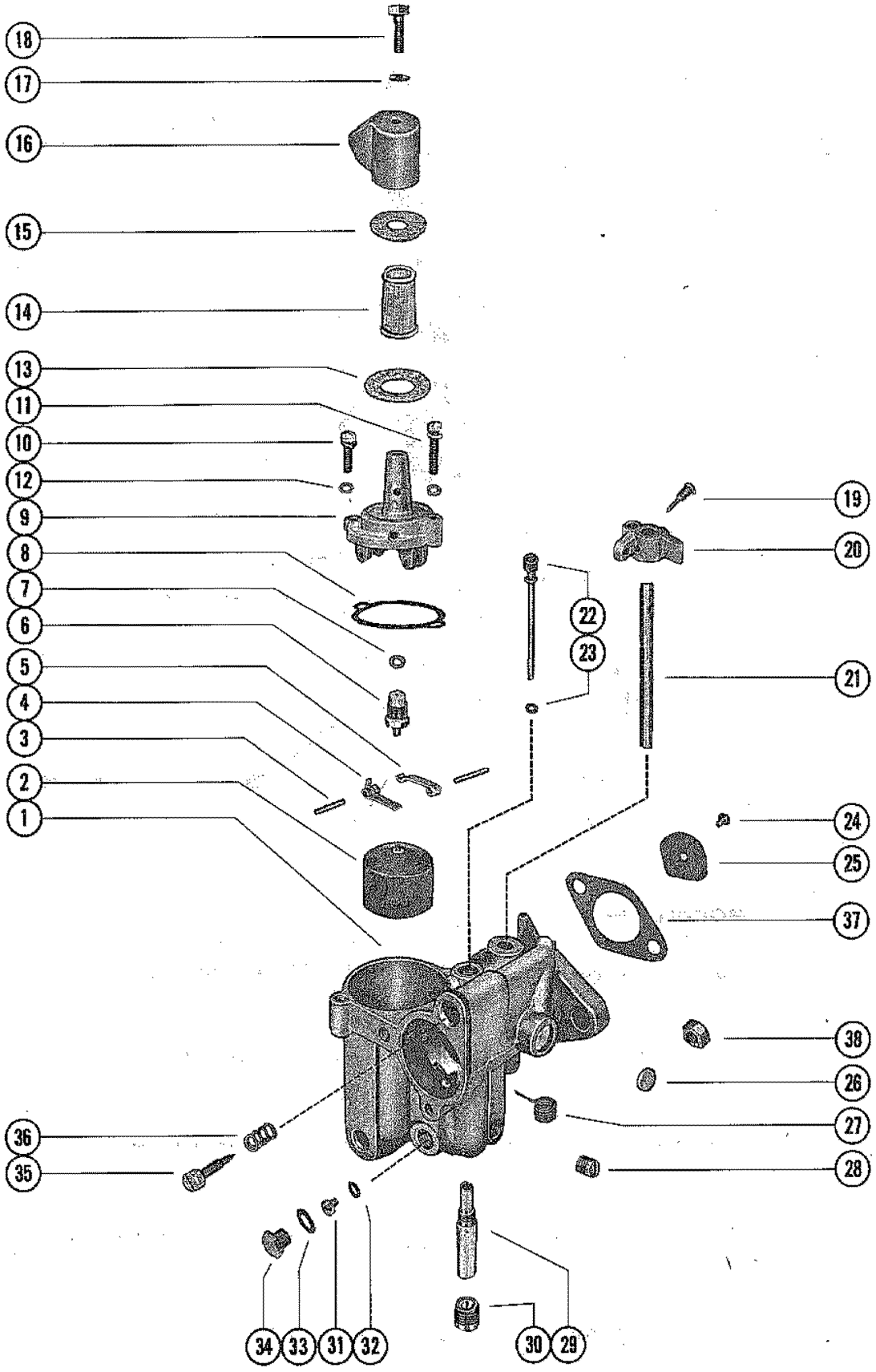

CARBURETOR ASSEMBLY

REF. NO.	PART NO.	SYM.	QTY.	DESCRIPTION
1	1343-4183		1	CARBURETOR ASSEMBLY, COMPLETE (KA-25A)
2	1399-110A1		1	FLOAT ASSEMBLY
3			2	PIN, FLOAT LEVER PINION
4			1	LEVER, FLOAT (LOWER)
5			1	LEVER, FLOAT (UPPER)
6	1399-1473		1	INLET NEEDLE, SEAT AND GASKET
7			1	GASKET, INLET SEAT
8			1	GASKET, FLOAT BOWL COVER
9	1399-1133		1	COVER, FLOAT BOWL
10	10-52195		1	SCREW, FLOAT BOWL COVER (SHORT)
11	10-52196		1	SCREW, FLOAT BOWL COVER (LONG)
12	13-26995		2	LOCKWASHER, FLOAT BOWL COVER SCREW
13			1	GASKET, STRAINER COVER (LARGE)
14	1399-3938		1	SCREEN, FILTER
15			1	GASKET, STRAINER COVER (SMALL)
16	1399-1135		1	COVER, STRAINER
17			1	GASKET, STRAINER COVER SCREW
18	10-25822		1	>SCREW, STRAINER COVER
19	10-20847		1	SCREW, THROTTLE CLUSTER
20	46387		1	>CLUSTER< THROTTLE
21	1399-2012		1	SHAFT, THROTTLE
22			1	>TUBE, IDLE
23			1	GASKET, IDLE TUBE
24			2	>SCREW AND LOCKWASHER, THROTTLE SHUTTER
25	1399-3032		1	>SHUTTER, THROTTLE
26			1	WELCH PLUG, BODY CHANNEL
27			1	SPRING, THROTTLE SHAFT RETURN
28	10-28845		1	SCREW, PLUG - BODY CHANNEL
29			1	MAIN NOZZLE
30	10-23178		1	SCREW, PLUG - MAIN NOZZLE
31	1399-1461		OPT	JET, MAIN FUEL (.061)
	1399-1459		1	JET, MAIN FUEL (.059) - STANDARD
	1399-1457		OPT	JET, MAIN FUEL (.057)
	1399-1655		OPT	JET, MAIN FUEL (.055)
32			1	GASKET, MAIN FUEL JET
33			1	GASKET, JET CHANNEL PLUG SCREW
34	10-28405		1	SCREW, PLUG - MAIN FUEL JET CHANNEL
35	1399-1713		1	SCREW, IDLE ADJUSTMENT

CONTINUED ON NEXT PAGE ➠

CARBURETOR ASSEMBLY

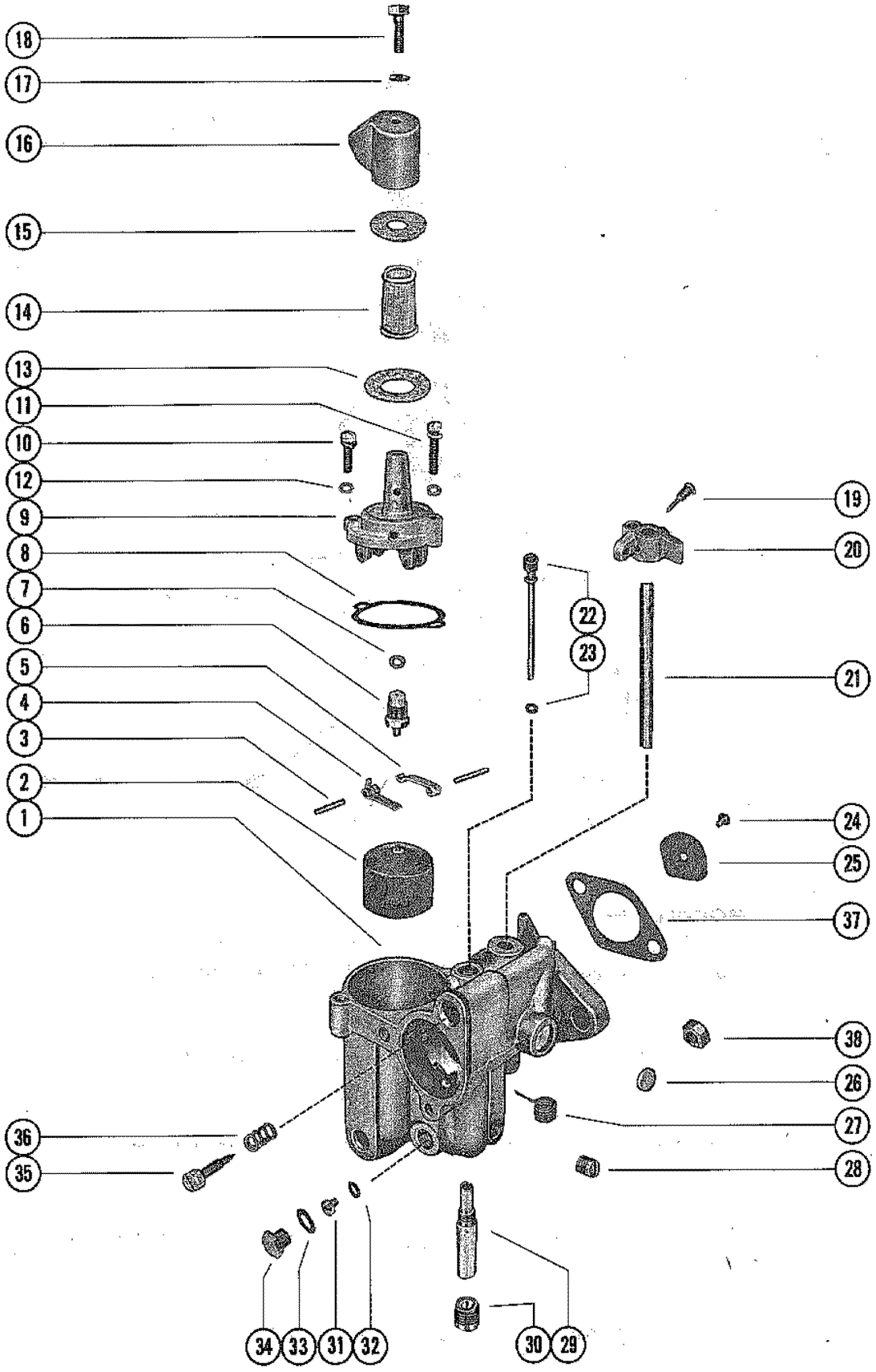

REF. NO.	PART NO.	SYM.	QTY.	DESCRIPTION
36			1	SPRING, IDLE ADJUSTMENT SCREW
	1399-2015		1	GASKET AND PACKING SET
	1399-4255		1	REPAIR PARTS KIT
37	27-31402		1	GASKET, CARBURETOR FLANGE
38	22-20083		2	NUT, CARBURETOR MOUNTING SUTDS

CARBURETOR CHOKE LINKAGE

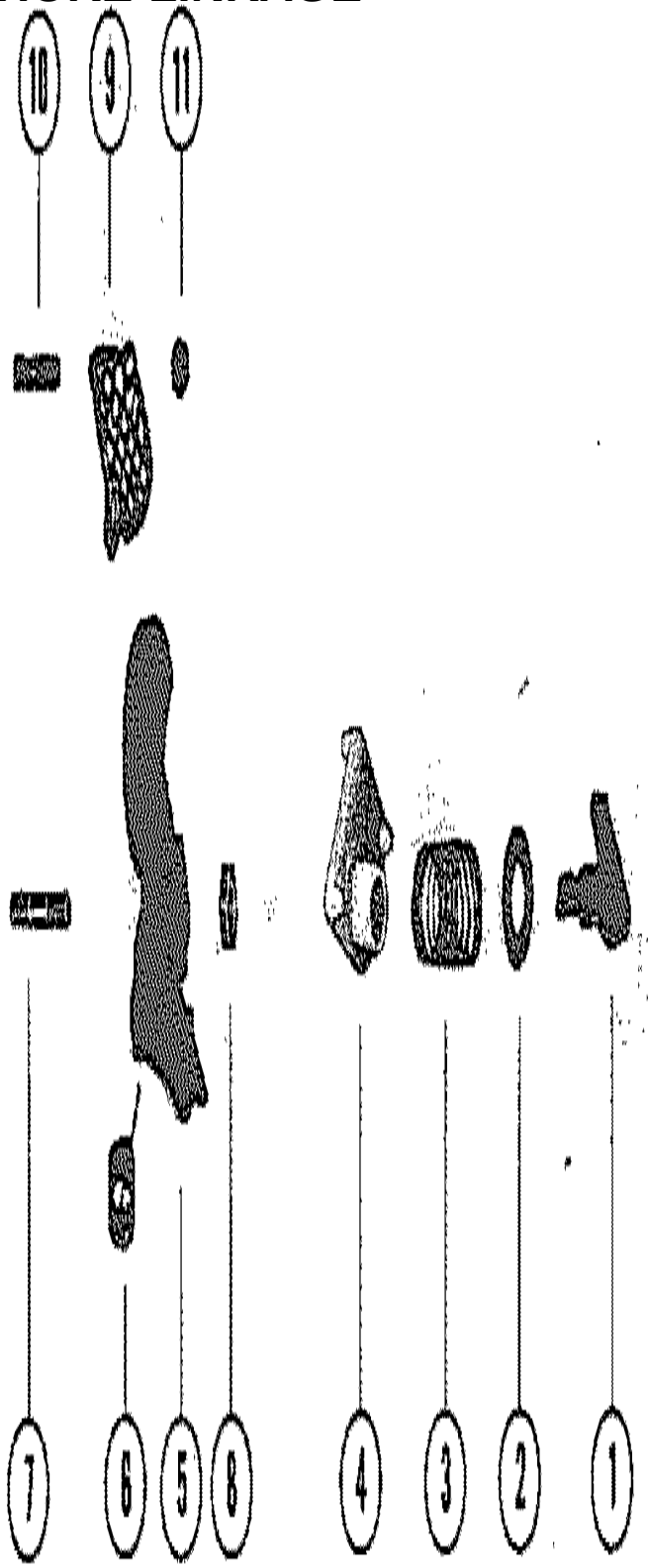

CARBURETOR CHOKE LINKAGE

REF. NO.	PART NO.	SYM.	QTY.	DESCRIPTION
1	47932		1	KNOB AND SHAFT, CHOKE
2	12-30314		1	WASHER, NYLON - CHOKE KNOW AND SHAFT
3	24-47968		1	SPRING, TENSION - CHOKE KNOB AND SHAFT
4	47933		1	LEVER, CHOKE SHUTTER
5	61105A1		1	SHUTTER, CHOKE - CARBURETOR
6	24-61106		1	SPRING, TORSION - CHOKE SHUTTER TENSION
7	16-53050		1	STUD, CHOKE SHUTTER TO CARBURETOR (1 1/2")
8	11-20110		1	NUT, CHOKE SHUTTER STUD
9	35-53596		1	SCREEN, FILTER - CARBURETOR
10	16-53820		1	STUD, CARBURETOR SCREEN TO CARBURETOR (1 1/16")
11	11-20110		1	NUT, CARBURETOR SCREEN STUD

FUEL PUMP AND FUEL LINE ASSEMBLY

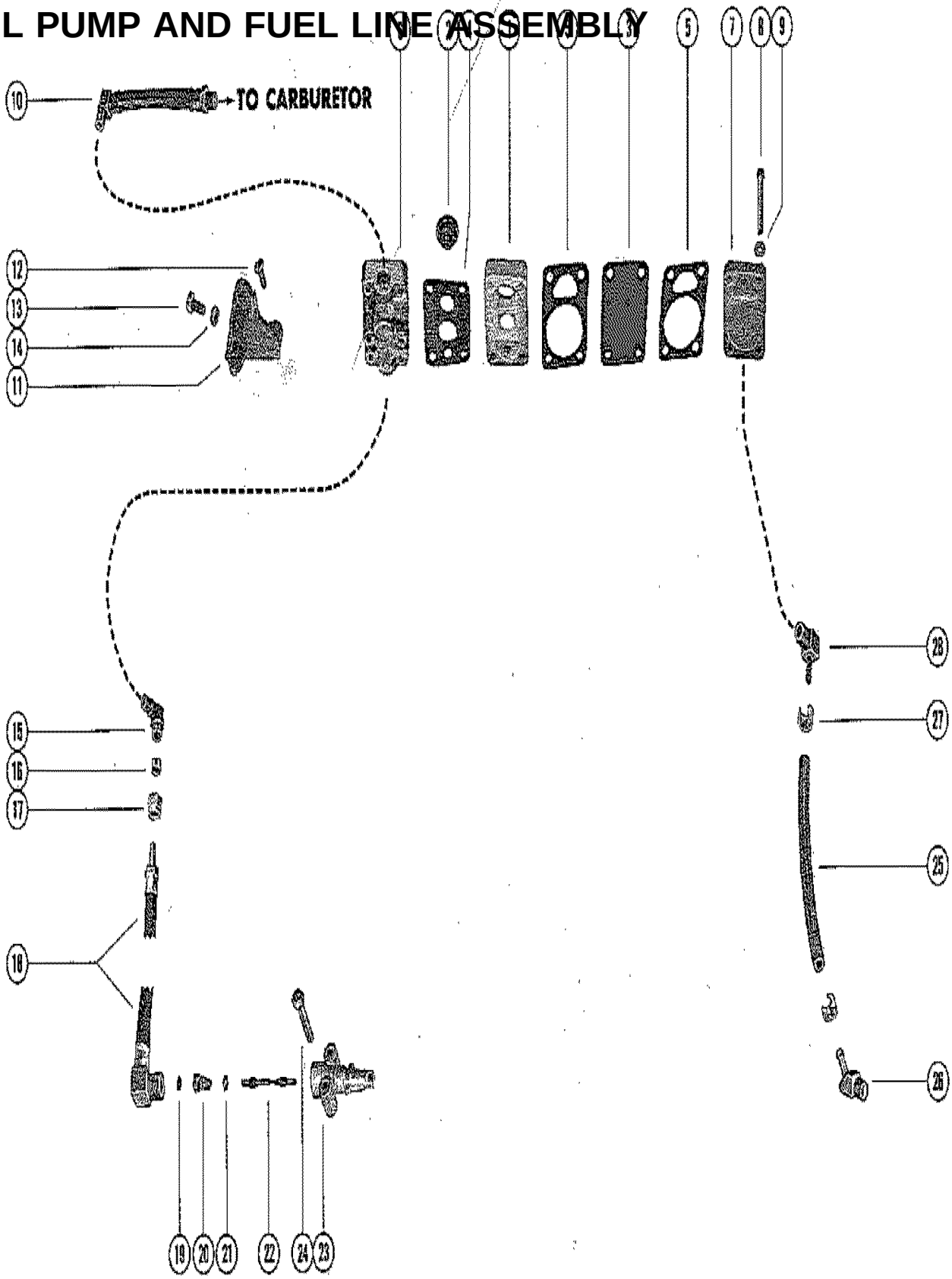

FUEL PUMP AND FUEL LINE ASSEMBLY

REF. NO.	PART NO.	SYM.	QTY.	DESCRIPTION
1	53238A3		1	FUEL PUMP ASSEMBLY
2	21-30430A2		2	CHECK VALVE ASSEMBLY
3	53245A1		1	DIAPHRAGM KIT, FUEL PUMP
4			1	GASKET, FUEL PUMP TO BASE
5			2	GASKET, FUEL PUMP
6	53241		1	BASE, FUEL PUMP
7	61541		1	COVER, FUEL PUMP
8	10-32627		4	SCREW, FUEL PUMP TO BASE (1 1/2")
9	12-20128		4	WASHER, FUEL PUMP SCREWS
10	32-54429		1	FUEL LINE, FUEL PUMP TO CARBURETOR (6 1/2')
11	53544		1	BRACKET, FUEL PUMP TO CRANKCASE
12	10-29200		2	SCREW, BRACKET TO FUEL PUMP (5/8")
13	10-45862		1	SCREW, FUEL PUMP BRACKET TO CRANKCASE (7/8")
14	11-46438		1	NUT, FUEL PUMP BRACKET SCREW
15	22-22995		1	FITTING, INLET - FUEL PUMP
16	22-22946		1	SLEEVE, RUBBER - FUEL PUMP INLET FITTING
17	22-22948		1	NUT, FUEL PUMP INLET FITTING
18	32-48019		1	FUEL LINE, INLET - ADAPTOR TO FUEL PUMP
19	30188		1	CUP WASHER, ADAPTOR
20	24-23067		1	SPRING, ADAPTOR STEM
21	25-20415		1	"O" RING, ADAPTOR STEM
22	23069		1	STEM, CHECK UNIT ADAPTOR
23	22833		1	ADAPTOR, CHECK UNIT
24	10-56354		2	SCREW, CHECK UNIT ADAPTOR TO BOTTOM COWL (2 1/2")
25	32-52742A1		1	HOSE, FUEL PUMP TO CYLINDER BLOCK (2 1/2")
26	22-53553		1	ELBOW, HOSE TO CYLINDER BLOCK (45)
27	54-20387		2	CLAMP, FUEL PUMP HOSE TO ELBOWS
28	22-54090		1	ELBOW, HOSE TO FUEL PUMP (90)

SHIFT CONTROL LINKAGE

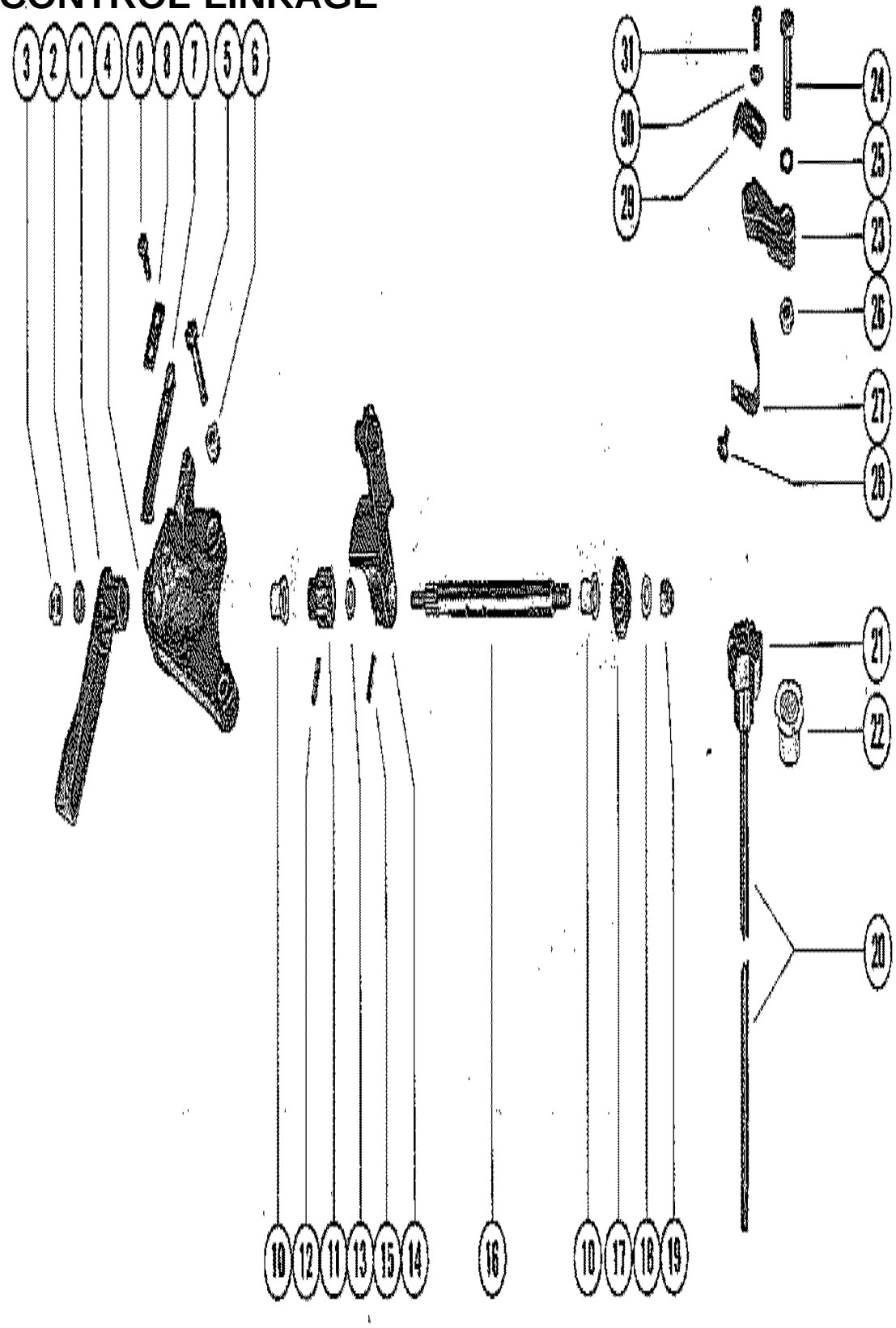

SHIFT CONTROL LINKAGE

REF. NO.	PART NO.	SYM.	QTY.	DESCRIPTION
1	59107		1	HANDLE, NYLON - SHIFT CONTROL
2	12-29245		1	WASHER, SHIFT CONTROL HANDLE
3	11-39305		1	NUT, SHIFT CONTROL HANDLE TO SHIFT SHAFT
4	39399		1	BRACKET, MOUNTING - SHIFT SHAFT
5	10-22421		2	SCREW, MOUNTING BRACKET TO POWERHEAD PLATE (1 1/4")
6	11-46887		2	NUT, MOUNTING BRACKET SCREW
7	24-39627		1	SPRING, DETENT - MOUNTING BRACKET
8	39601		1	PLATE, DETENT SPRING
9	10-20100		2	SCREW, PLATE AND SPRING TO MOUNTING BRACKET (1/2")
10	23-30678		2	BUSHING, NYLON - SHIFT SHAFT
11	39588		1	CAM, DETENT - SHIFT SHAFT
12	17-25905		1	PIN, ROLL - DETENT CAM TO SHIFT SHAFT
13	13-36206		1	WASHER, WAVE - SHIFT SHAFT
14	39415		1	LEVER, SHIFT CONTROL
15	17-25905		1	PIN, ROLL - SHIFT CONTROL LEVER TO SHIFT SHAFT
16	39632		1	SHAFT< SHIFT (HORIZONTAL)
17	43-30802		1	GEAR, SECTOR - SHIFT SHAFT
18	12-29245		1	WASHER< SHIFT SHAFT
19	11-20361		1	NUT, SECTOR GEAR TO SHIFT SHAFT
20	61009A1		1	SHIFT CONTROL SHAFT ASSEMBLY, VERTICAL
21	43-58972		1	GEAR, SECTOR - SHIFT CONTROL SHAFT
22	23-30677		1	BUSHING, NYLON - SHIFT CONTROL SHAFT
23	58979		1	FOLLOWER, NEUTRAL SPEED LIMITER
24	10-24644		1	SCREW, FOLLOWER TO POWERHEAD MOUNTING PLATE (1 3/8")
25	15-28212010		1	SHIM, LIMITER FOLLOWER SCREW
26	11-46887		1	NUT, LIMITER FOLLOWER SCREW
27	24-39675		1	SPRING, NEUTRAL SPEED LIMITER FOLLOWER
28	10-30663		1	SCREW, SPRING TO LIMITER FOLLOWER (3/8")
29	46837		1	STOP, OVER-SPEED LIMITER
30	12-24676		1	WASHER, LIMITER STOP SCREW
31	10-46898		1	SCREW, LIMITER STOP TO FOLLOWER (7/16")

THROTTLE CONTROL LINKAGE

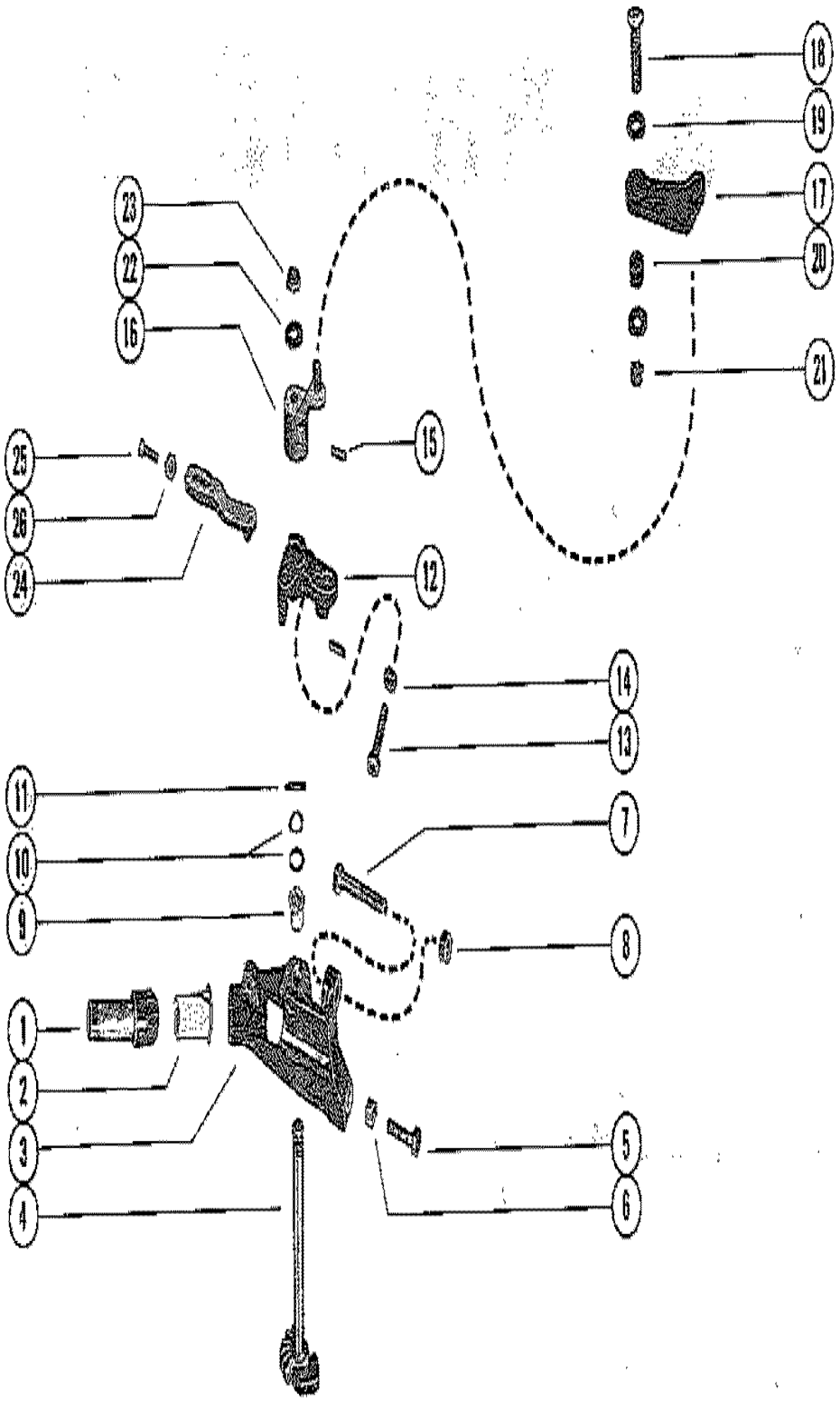

THROTTLE CONTROL LINKAGE

REF. NO.	PART NO.	SYM.	QTY.	DESCRIPTION
1	43-61533		1	GEAR, PINION - THROTTLE CONTROL
2	23-31011		1	BUSHING, NYLON - THROTTLE CONTROL HOUSING
3	48662		1	HOUSING, THROTTLE CONTROL
4	43-61535		1	SHAFT AND GEAR, THROTTLE
5	10-20653		1	SCREW, THROTTLE CONTROL HOUSING FASTENING (1") - LOWER
6	11-46887		1	NUT, THROTTLE CONTROL HOUSING SCREW
7	10-21091		1	SCREW, THROTTLE CONTROL HOUSING FASTENING (1 1/8") - UPPER
8	11-46887		1	NUT, THROTTLE CONTROL HOUSING SCREW
9	23-33462		1	BUSHING, NYLON - SHAFT AND GEAR (THROTTLE CONTROL HOUSING)
10	12-48679		1	WASHER, THROTTLE SHAFT AND GEAR
11	17-36325		1	PIN, THROTTLE SHAFT AND GEAR
12	46413		1	THROTTLE LEVER, VERTICAL SHAFT
13	10-22960		2	SCREW, VERTICAL SHAFT THROTTLE LEVER (1 3/8")
14	11-25168		2	NUT, VERTICAL SHAFT THROTTLE LEVER SCREW
15	17-24685		2	PIN, GROOVE - STATOR PLATE LEVER TO VERTICAL SHAFT
16	60864		1	LEVER, STATOR PLATE - VERTICAL SHAFT
17	56700		1	LEVER, STATOR PLATE CONTROL
18	10-22659		1	SCREW, STARTER HOUSING TO CRANKCASE (1 5/8")
19	12-57029		2	WASHER, STARTER HOUSING SCREW **PART OF STARTER HOUSING ASSEMBLY**
20	23-46406		1	BUSHING, STATOR PLATE CONTROL LEVER
21	11-20361		1	NUT, STARTER HOUSING TO CRANKCASE SCREW
22	12-24664		1	WASHER, SHAFT AND GEAR
23	11-20586		1	NUT, SHAFT AND GEAR
24	46405		1	LINK, THROTTLE CLUSTER
25	10-25876		1	SCREW< THROTTLE CLUSTER LINK (7/8")
26	11-20645		1	NUT, JAM - THROTTLE CLUSTER LINK SCREW

CYLINDER BLOCK AND CRANKCASE ASSEMBLY

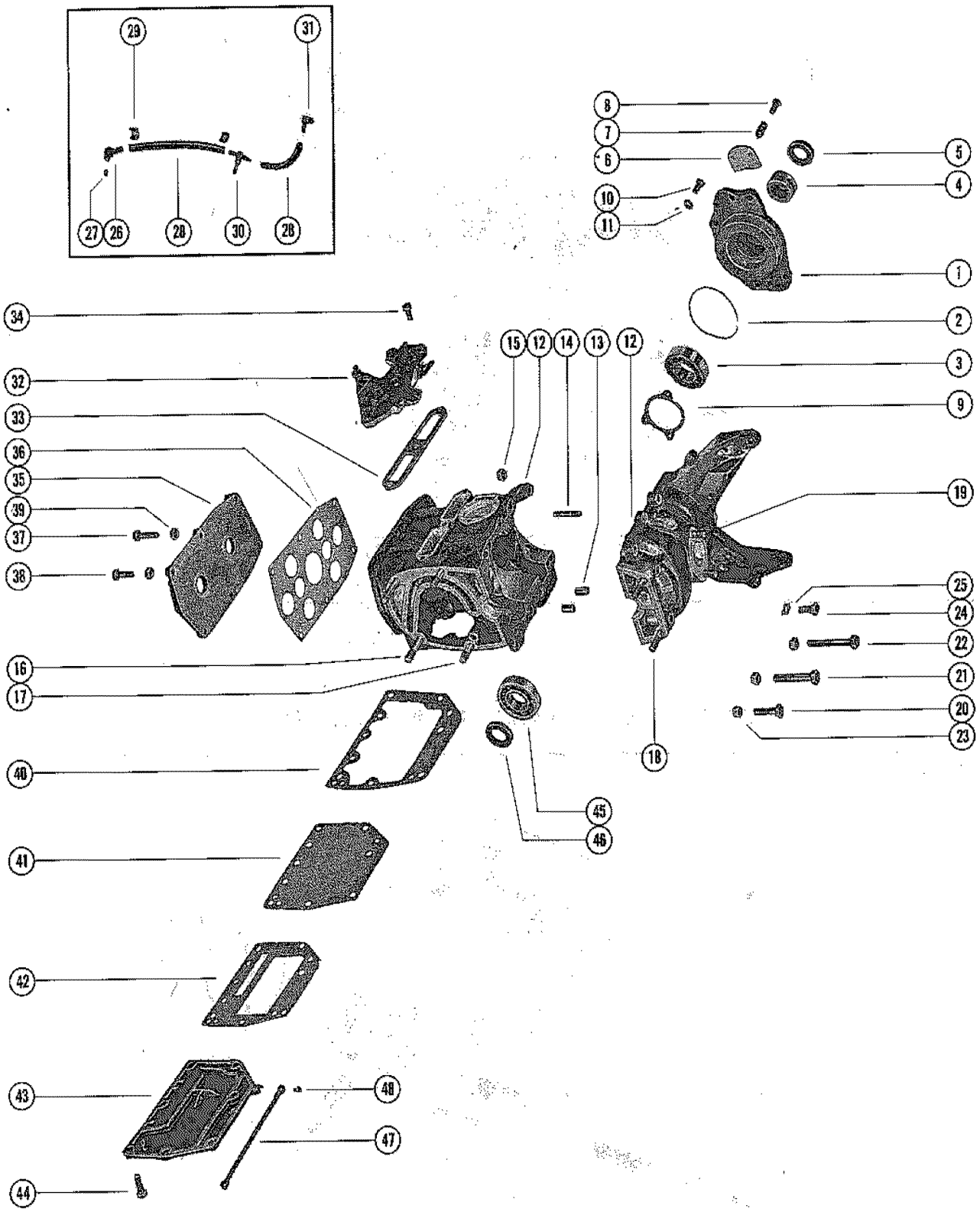

CYLINDER BLOCK AND CRANKCASE ASSEMBLY

REF. NO.	PART NO.	SYM.	QTY.	DESCRIPTION
1	1147-4472A1		1	CRANKCASE TOP ASSEMBLY
2	25-20081		1	"O" RING, CRANKCASE TOP
3	30-54215		1	BEARING, BALL - CRANKCASE TOP (UPPER)
4	31-20594		1	BEARING, ROLLER - CRANKCASE TOP (UPPER)
5	26-56747		1	OIL SEAL, CRANKCASE TOP (UPPER)
6	54-53557A1		2	CLIP ASSEMBLY, STATOR HOLD DOWN
7	24-34731		4	SPRING, STATOR HOLD DOWN
8	10-53852		4	SCREW, CLIP ASSEMBLY TO END CAP (5/8")
9	15-56191A1		AR	SHIM, CRANKCASE TOP TO CYLINDER BLOCK (.002-3-5-10)
10	10-24786		3	SCREW, CRANKCASE TOP TO CYLINDER BLOCK (5/8")
11	13-20202		3	LOCKWASHER, CRANKCASE TOP TO CYLINDER BLOCK SCREW
12	848-4687A3		1	CYLINDER BLOCK AND CRANKCASE ASSEMBLY
13	17-23784		2	PIN, DOWEL - CRANKCASE TO CYLINDER BLOCK
14	16-20462		2	STUD, CRANKCASE TO CYLINDER BLOCK (1 5/16")
15	11-46793		2	NUT, CRANKCASE STUD
16	16-39766		2	STUD, CYLINDER BLOCK TO DRIVE SHAFT HOUSING (2 1/8")
17	16-20991		2	STUD, CYLINDER BLOCK TO DRIVE SHAFT HOUSING (1 5/8")
18	16-20991		2	STUD, CRANKCASE TO DRIVE SHAFT HOUSING (1 5/8")
19	16-23740		2	STUD, CARBURETOR TO CRANKCASE (1 3/32")
20	10-26066		4	SCREW, CRANKCASE TO CYLINDER BLOCK (1 1/4")
21	10-26065		1	SCREW, CRANKCASE TO CYLINDER BLOCK (1")
	10-21449		2	SCREW, CRANKCASE TO CYLINDER BLOCK (2")
22	10-26132		2	SCREW, CRANKCASE TO CYLINDER BLOCK (2 1/2")
23	11-46793		10	NUT, CRANKCASE SCREW
24	10-26801		1	SCREW, LOCK - CENTER MAIN BEARING (5/8")
25	14-20091		1	TAB WASHER, CENTER MAIN BEARING LOCK SCREW
26	22-61295A5		1	ELBOW ASSEMBLY, BLEED DRAIN PART OF CYLINDER BLOCK AND CRANK **PART OF CYLINDER BLOCK AND CRANKCASE ASSEMBLY**
27	21-56011A2		1	CHECK VALVE ASSEMBLY **PART OF CYLINDER BLOCK AND CRANKCASE ASSEMBLY**
28	32-60584		2	HOSE, BLEED DRAIN **PART OF CYLINDER BLOCK AND CRANKCASE ASSEMBLY**
29	54-56223		4	CLAMP, BLEED HOSE ATTACHING **PART OF CYLINDER BLOCK AND CRANKCASE ASSEMBLY**
30	22-61559		1	TEE, INJECTION **PART OF CYLINDER BLOCK AND CRANKCASE ASSEMBLY**
31	22-61558		1	ELBOW, BLEED DRAIN **PART OF CYLINDER BLOCK AND CRANKCASE ASSEMBLY**
32	52580		1	COVER, TRANSFER PORT
33	27-27936		1	GASKET, TRANSFER PORT COVER
34	10-28636		1	SCREW, TRANSFER PORT COVER TO CYLINDER BLOCK (3/4")

CONTINUED ON NEXT PAGE ➠

CYLINDER BLOCK AND CRANKCASE ASSEMBLY

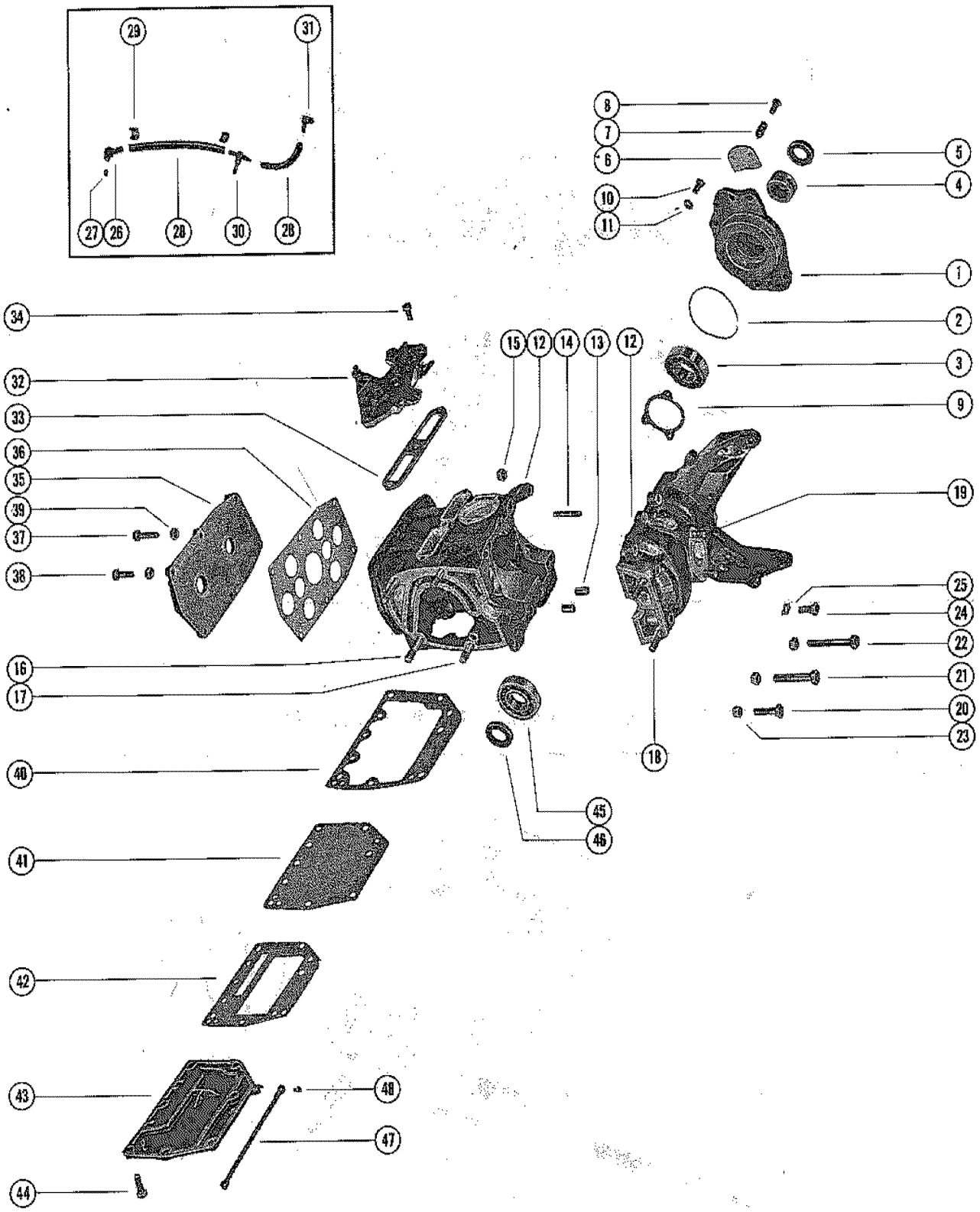

CYLINDER BLOCK AND CRANKCASE ASSEMBLY

REF. NO.	PART NO.	SYM.	QTY.	DESCRIPTION
34	10-24646		2	SCREW, TRANSFER PORT COVER TO CYLINDER BLOCK (5/8")
35	1022-3567		1	COVER, CYLINDER BLOCK
36	27-52579		1	GASKET, CYLINDER BLOCK COVER
37	10-24644		2	SCREW< COVER TO CYLINDER BLOCK (1 3/8")
38	10-21091		4	SCREW, COVER TO CYLINDER BLOCK (1 1/8')
39	11-46887		6	NUT, CYLINDER BLOCK COVER SCREW
40	27-45088		1	GASKET, CYLINDER BLOCK TO BAFFLE PLATE
41	39308		1	PLATE, BAFFLE - EXHAUST MANIFOLD
42	27-39316		1	GASKET, BAFFLE PLATE TO MANIFOLD COVER
43	57576		1	COVER, EXHAUST MANIFOLD
44	10-28782		7	SCREW, MANIFOLD COVER TO CYLINDER BLOCK (7/8")
45	30-54215		1	BEARING, BALL - CRANKCASE (LOWER)
46	26-56394		1	OIL SEAL, CRANKCASE (LOWER)
47	56757A2		1	GROUND WIRE ASSEMBLY, EXHAUST COVER TO BOTTOM COWL
48	10-30663		1	SCREW, GROUND LEAD TO EXHAUST COVER (3/8")

CRANKSHAFT AND CENTER MAIN BEARING ASSEMBLY

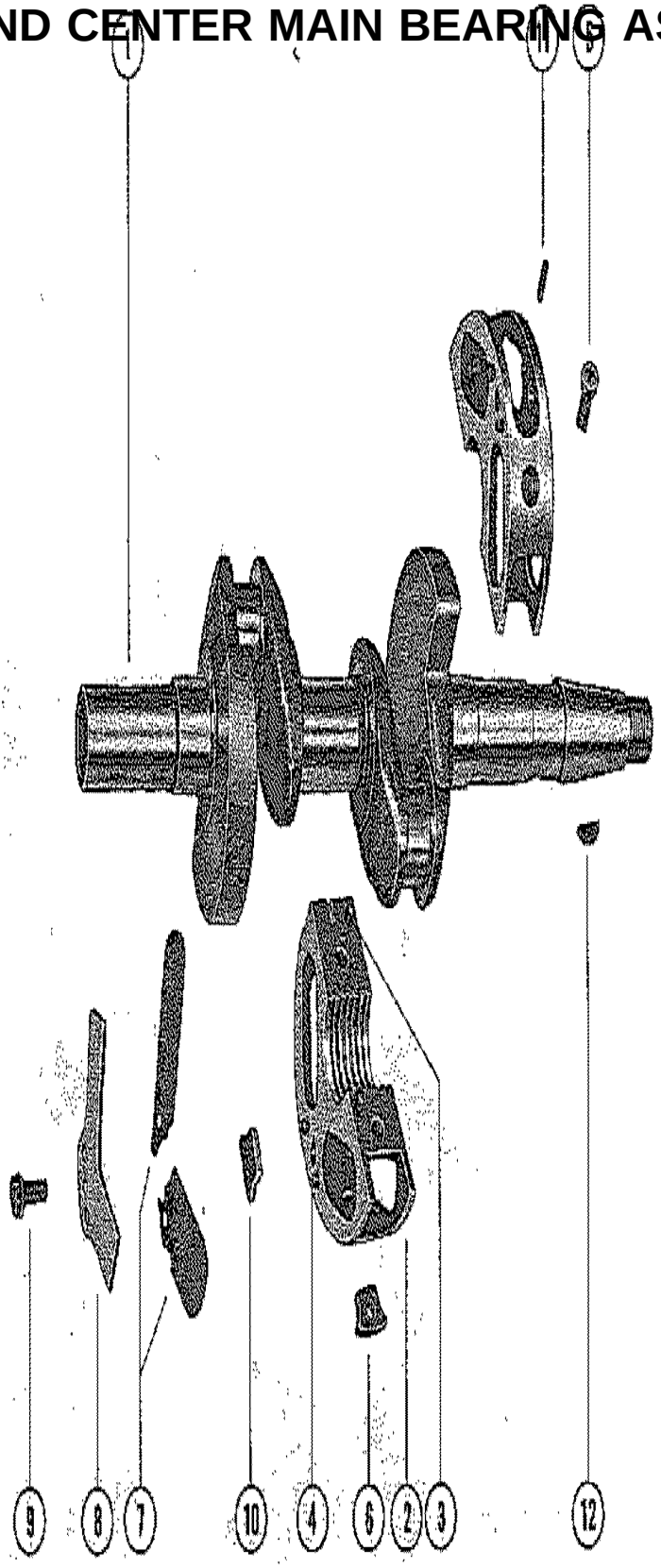

CRANKSHAFT AND CENTER MAIN BEARING ASSEMBLY

REF. NO.	PART NO.	SYM.	QTY.	DESCRIPTION
1	415-4478		1	CRANKSHAFT
2	534-3267A8		1	CENTER MAIN BEARING ASSEMBLY
3	17-20032		2	DOWEL PIN, CENTER MAIN BEARING
4	17-55453		8	PIN, REED STOP
5	10-45775		2	SCREW, CENTER MAIN BEARING CLAMPING (9/16")
6	11-45574		2	NUT, CENTER MAIN BEARING CLAMPING SCREW
7	34-56704A1		1	REED SET, CENTER MAIN BEARING (MATCHED)
8	34-32038		4	REED STOP, MAIN BEARING REED VALVES
9	10-53481		4	SCREW, REED STOP MOUNTING (9/16")
10	11-20110		4	NUT, REED STOP MOUNTING SCREW
11	17-20032		1	DOWEL PIN, MAIN BEARING TO CYL BLOCK
12	28-20094		1	KEY, FLYWHEEL

PISTON AND CONNECTING ROD ASSEMBLY

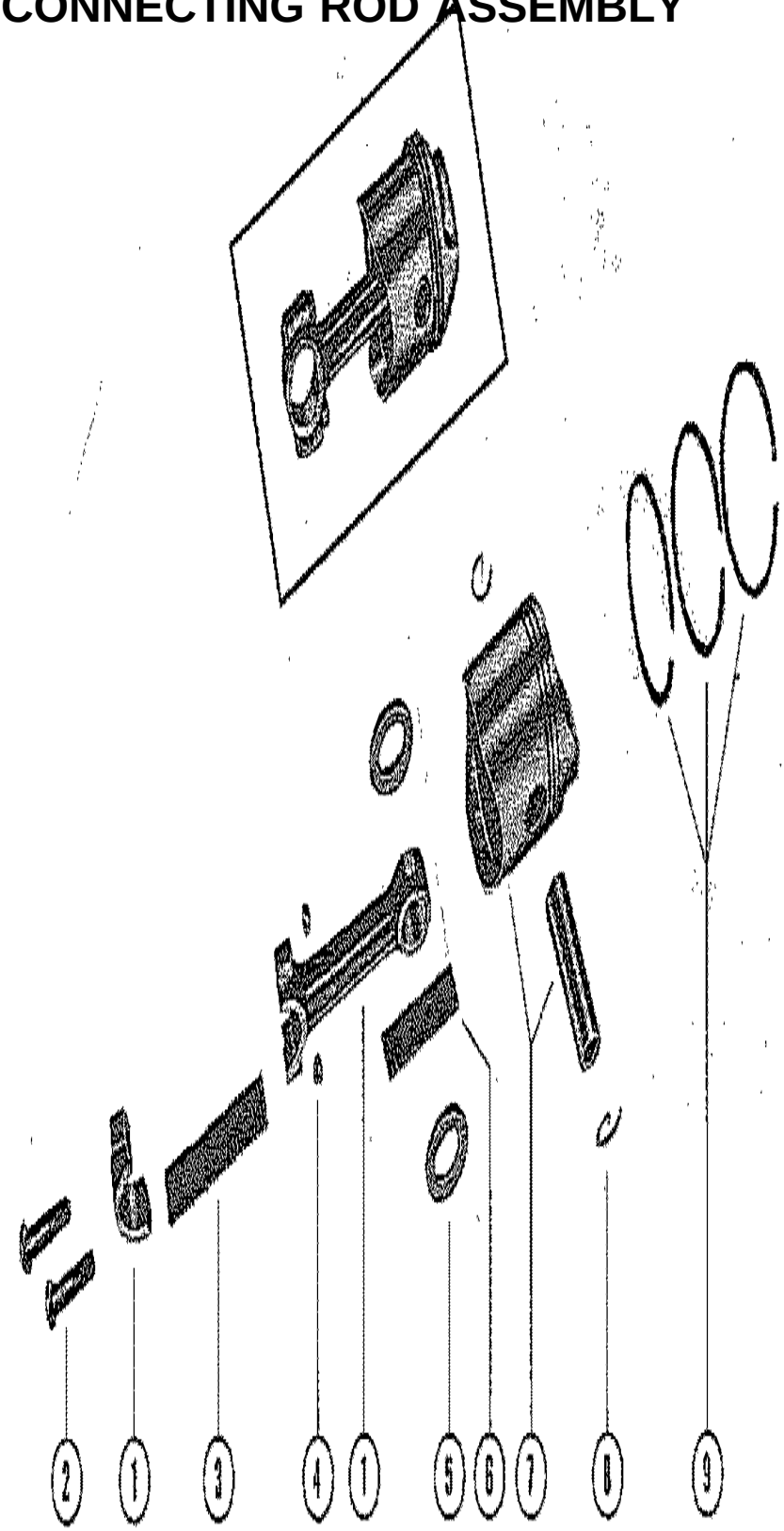

PISTON AND CONNECTING ROD ASSEMBLY

REF. NO.	PART NO.	SYM.	QTY.	DESCRIPTION
1	619-3195A2		2	CONNECTING ROD ASSEMBLY
2	10-45379		4	SCREW, CONNECTING ROD
3	29-20046		50	BEARING, NEEDLE - CRANKPIN
4	11-20061		4	NUT, CONNECTION ROD SCREW
5	12-47275		4	WASHER, NEEDLE BEARING RETAINING
6	29-20063		54	BEARING, NEEDLE - PISTON PIN
7	743-3193A2		2	PISTON AND PISTON PIN ASSEMBLY
8	40-47276		4	LOCK RING, PISTON PIN
9	39-27841A12		1	RING, PISTON
	743-3366A2		2	PISTON AND PISTON PIN ASSEMBLY **.015 OVERSIZE PISTONS AND RINGS**
	39-28616A12		1	RING, PISTON (.015 OVERSIZE) **.015 OVERSIZE PISTONS AND RINGS**

STEERING HANDLE ASSEMBLY

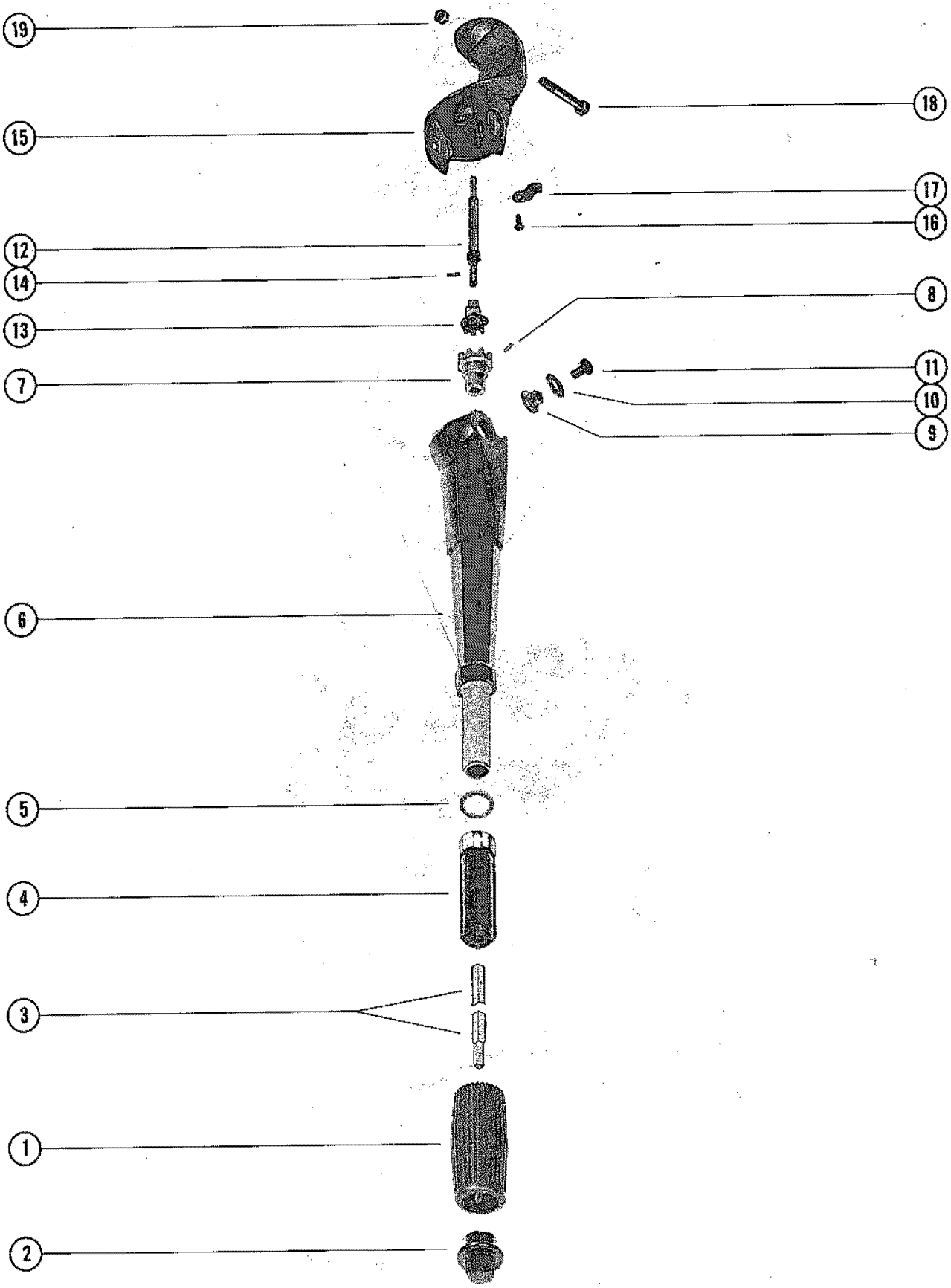

STEERING HANDLE ASSEMBLY

REF. NO.	PART NO.	SYM.	QTY.	DESCRIPTION
-	**60850A3**		**1**	**STEERING HANDLE ASSEMBLY, COMPLETE**
1	60854		1	GRIP, HANDLE - THROTTLE
2	62251		1	CAP, HANDLE THROTTLE
3	60851		1	SHAFT, THROTTLE
4	60853		1	HANDLE, THROTTLE SHAFT
5	12-62252		1	WASHER, THROTTLE HANDLE TO STEERING ARM
6	60850		1	ARM, STEERING HANDLE
7	43-60852		1	GEAR, BALL THROTTLE SHAFT
8	17-27088		1	PIN, BALL GEAR TO THROTTLE SHAFT
9	48003		2	PIVOT, STEERING HANDLE TO BRACKET
10	15-48002015		AR	SHIM, STEERING HANDLE PIVOT TO BRACKET (.015)
11	10-56214		2	SCREW, STEERING HANDLE TO ARM BRACKET (5/8")
12	60857A2		1	UNIVERSAL JOINT ASSEMBLY
13	43-60852		1	GEAR, BALL - UNIVERSAL JOINT
14	17-27088		1	PIN, BALL GEAR TO UNIVERSAL JOINT
15	61107A1		1	BRACKET, STEERING ARM
16	10-62233		2	SCREW, DETENT SPRING TO STEERING ARM BRACKET (5/8")
17	24-47744		2	SPRING, DETENT - STEERING HANDLE
18	10-26132		3	SCREW, STEERING ARM BRACKET TO SADDLE (2 1/2")
19	11-46793		3	NUT, STEERING ARM BRACKET FASTENING SCREW

BOTTOM COWL ASSEMBLY

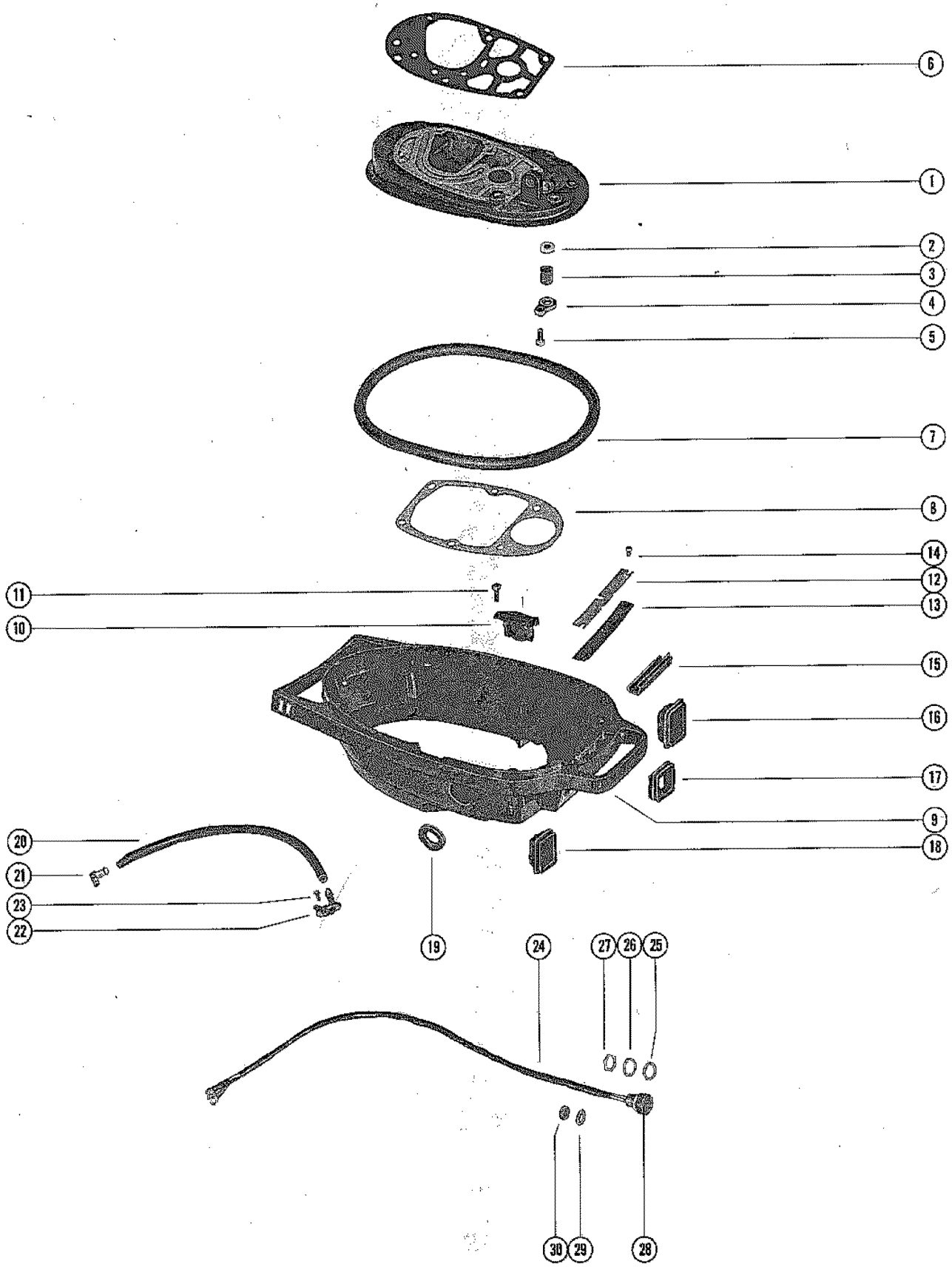

BOTTOM COWL ASSEMBLY

REF. NO.	PART NO.	SYM.	QTY.	DESCRIPTION
1	58978A2		1	PLATE ASSEMBLY, MOUNTING
2	12-36555		1	WASHER, NYLON - WATER INLET TUBE
3	26-25329		1	SEAL, RUBBER - WATER INLET TUBE
4	33513		1	RETAINER, WATER INLET TUBE SEAL
5	10-20540		1	SCREW, TETAINER TO MOUNTING PLATE (5/8")
6	27-39401		1	GASKET, POWERHEAD TO MOUNTING PLATE
7	39622		1	SEAL, MOUNTING PLATE TO BOTTOM COWL
8	27-39402		1	GASKET, MOUNTING PLATE TO DRIVE SHAFT HOUSING
9	2129-4636A2		1	BOTTOM COWL ASSEMBLY
10	48472		1	COVER, HARNESS HOLE
11	10-61802		2	SCREW, COVER TO BOTTOM COWL (7/8")
12	46266A2		1	COVER PLATE ASSEMBLY, BOTTOM COWL
13	39591		1	PAD, SOUND - COVER PLATE
14	10-30663		3	SCREW, COVER PLATE TO BOTTOM COWL (3/8")
15	39630		1	CUSHION, RUBBER - BOTTOM COWL
16	60886		1	BOOT, THROTTLE CABLE - BOTTOM COWL
17	39778		1	BOOT, FUEL ADAPTOR - BOTTOM COWL
18	39780		1	BOOT, SHIFT CABLE - BOTTOM COWL
19	39058		1	SEAL, SHIFT HANDLE - BOTTOM COWL
20	32-34395A1		1	HOSE, TELL TALE - COWL TO CYLINDER BLOCK (11")
21	39180		1	ELBOW, TELL TALE HOSE TO CYLINDER BLOCK C-22-25885 IS PART O **C-22-25885 IS PART OF CYLINDER BLOCK AND CRANKCASE ASSEMBLY**
22	52889		1	NOZZLE, TELL TALE HOSE TO BOTTOM COWL S **PART OF BOTTOM COWL ASSEMBLY**
23	10-35519		1	SCREW, TELL TALE NOZZLE TO BOTTOM COWL (1/2") **PART OF BOTTOM COWL ASSEMBLY**
24	59065A1		1	STOP SWITCH ASSEMBLY
25	12-59061		1	WASHER, STATOR LEAD TO STOP SWITCH
26	13-21972		1	LOCKWASHER, STOP SWITCH CONNECTOR
27	22-21971		1	NUT, STOP SWITCH TO BOTTOM COWL
28	38950A1		1	COVER ASSEMBLY, STOP SWITCH
29	13-26996		1	LOCKWASHER, STATOR LEAD NUT
30	11-20645		1	NUT, STATOR LEAD TO STOP SWITCH

CLAMP AND SWIVEL BRACKET ASSEMBLY

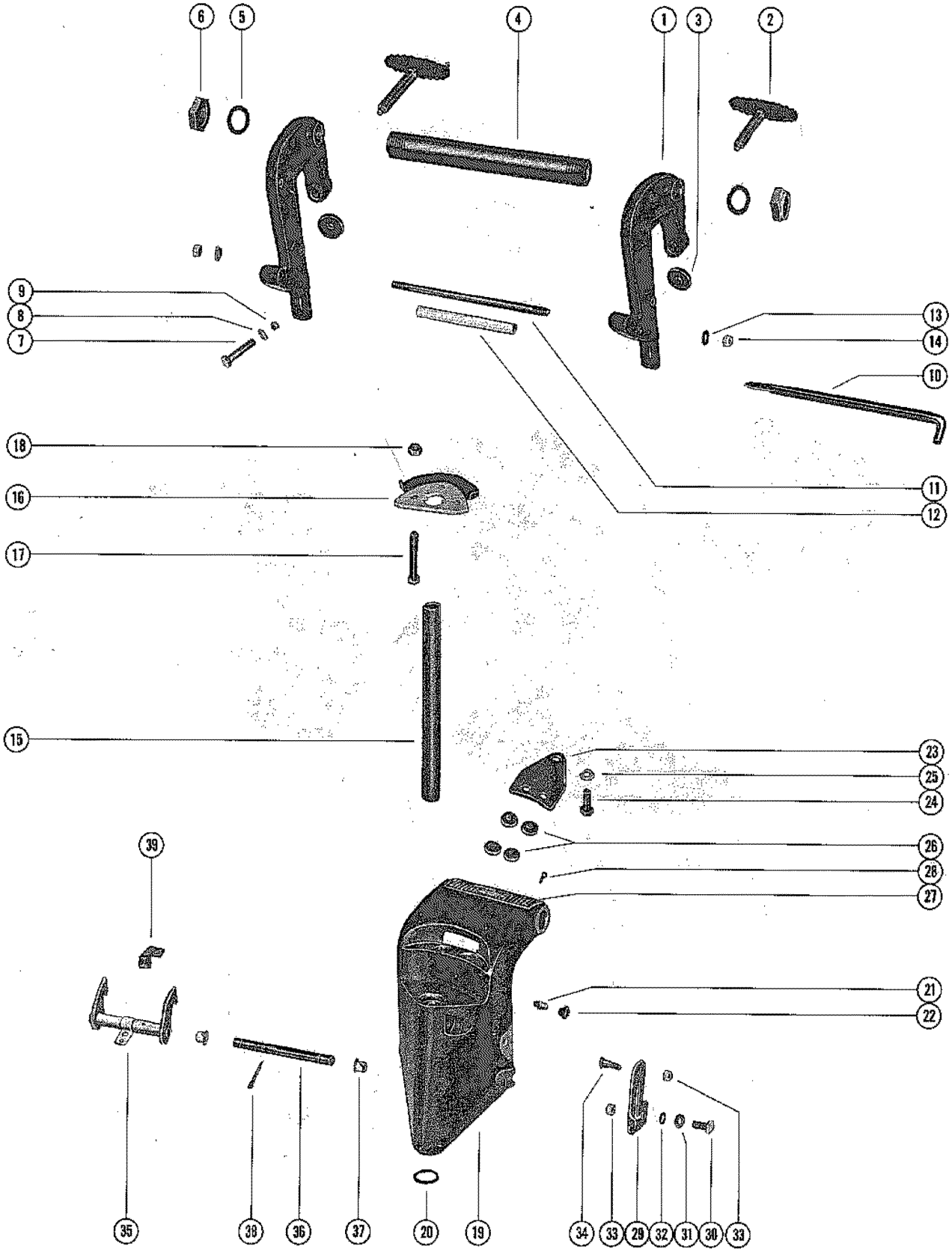

CLAMP AND SWIVEL BRACKET ASSEMBLY

REF. NO.	PART NO.	SYM.	QTY.	DESCRIPTION
1	1427-3293A1		2	CLAMP BRACKET ASSEMBLY
2	22477A4		2	THUMB SCREW ASSEMBLY
3	12-20214		2	WASHER, THUMB SCREW
4	30685		1	TILT TUBE, CLAMP BRACKET TO SWIVEL BRACKET
5	12-52864		2	SHIM, CLAMP BRACKET TILT TUBE
6	11-30499		2	NUT, TILT TUBE FASTENING
7	10-26483		2	BOLT, CLAMP BRACKET TO TRANSOM (2 3/4")
8	12-26485		2	WASHER, CLAMP BRACKET SCREW
9	11-26484		2	NUT, CLAMP BRACKET SCREW
10	17-56373A1		1	TILT LOCK PIN ASSEMBLY
11	16-59620		1	STUD, CLAMP BRACKET (8")
12	23-59621		1	SPACER, CLAMP BRACKET STUD
13	13-26993		2	LOCKWASHER, CLAMP BRACKET STUD
14	11-28770		2	NUT, CLAMP BRACKET STUD
15	17-39585		1	SWIVEL PIN
16	33423		1	CO-PILOT DISC
17	10-26132		3	SCREW, CO-PILOT DISC TO SADDLE (2 1/2")
18	11-46793		3	NUT, CO-PILOT DISC TO SADDLE SCREW
19	1461-2683A2		1	SWIVEL BRACKET ASSEMBLY **SERIAL 00000000-03312949**
20	25-29845		2	"O" RING, SWIVEL BRACKET **SERIAL 00000000-03312949**
21	22-31345		1	FITTING, GREASE - SWIVEL BRACKET **SERIAL 00000000-03312949**
22	29359		1	LUBRICAP, SWIVEL BRACKET GREASE FITTING **SERIAL 00000000-03312949**
23	39307		1	PLATE, CLAMP - CO-PILOT **SERIAL 00000000-03312949**
24	10-56784		1	SCREW, CLAMP PLATE TO SWIVEL BRACKET (1") **SERIAL 00000000-03312949**
19	1461-4752A2		1	SWIVEL BRACKET ASSEMBLY **SERIAL 03312950-09999999**
20	25-29845		1	"O" RING, SWIVEL BRACKET **SERIAL 03312950-09999999**
21	22-31345		1	FITTING, GREASE **SERIAL 03312950-09999999**
22	29359		1	LUBRICAP, SWIVEL BRACKET GREASE FITTING **SERIAL 03312950-09999999**
23	62054		1	PLATE, CLAMP - CO-PILOT **SERIAL 03312950-09999999**
24	10-62055		1	SCREW, PLATE TO SWIVEL BRACKET (1 1/4") **SERIAL 95033129-09999999**
25	12-56720		1	WASHER, CLAMP PLATE SCREW **SERIAL 03312950-09999999**
26	20203		4	DISC, FRICTION - CLAMP PLATE AND SWIVEL BRACKET
27	38-56745		1	SERIAL PLATE
28	10-25612		4	SCREW, DRIVE - SERIAL PLATE TO SWIVEL BRACKET
29	55851		1	LEVER, TILT STOP
30	10-29237		1	SCREW, RETAINING - LEVER TO SWIVEL BRACKET
31	13-36076		1	WASHER, WAVE - TILT STOP LEVER SCREW
32	15-37711020		1	SHIM, RETAINING SCREW
33	11-46887		2	NUT, TILT STOP LEVER SCREW

CONTINUED ON NEXT PAGE ➠

CLAMP AND SWIVEL BRACKET ASSEMBLY

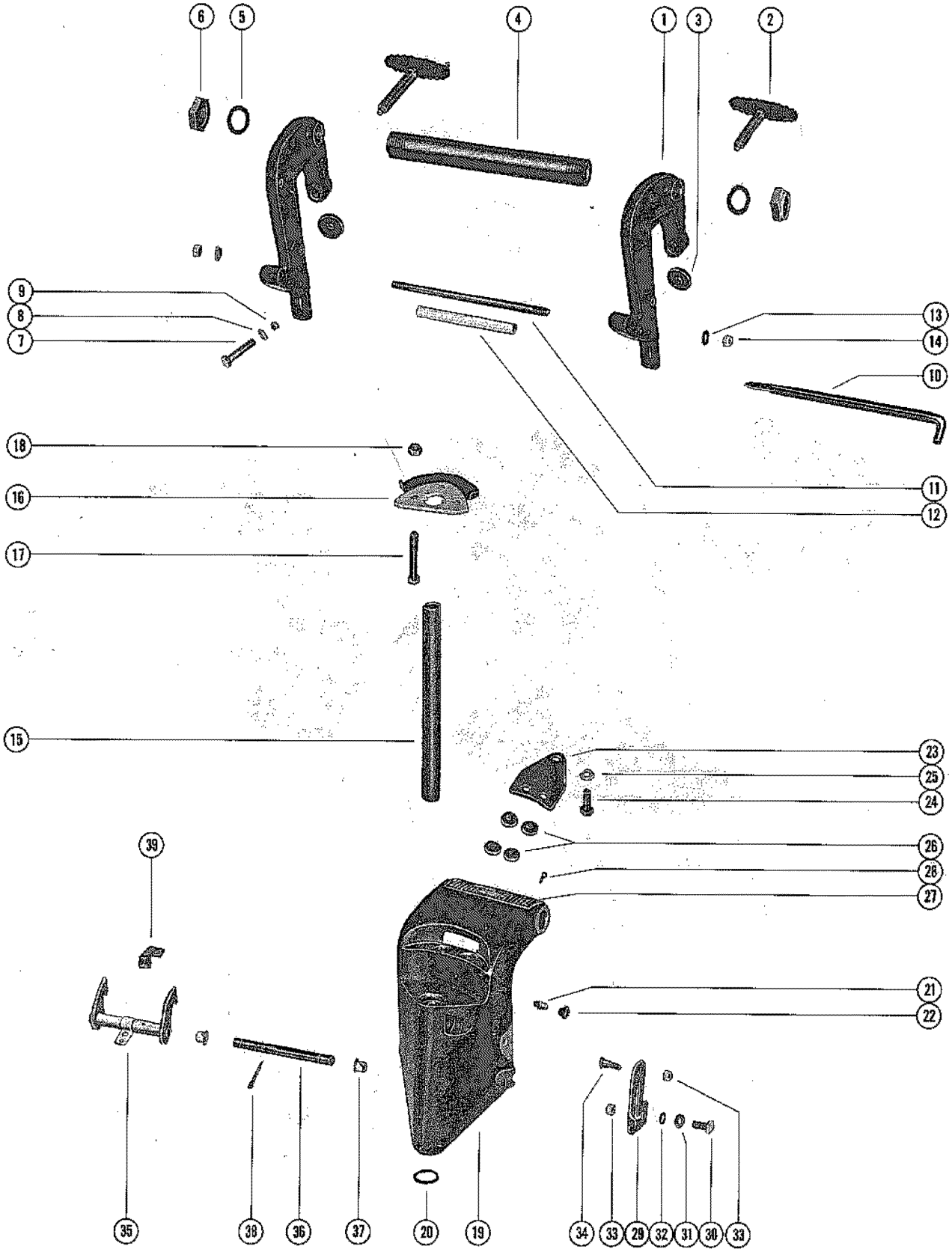

CLAMP AND SWIVEL BRACKET ASSEMBLY

REF. NO.	PART NO.	SYM.	QTY.	DESCRIPTION
34	10-27791		1	SCREW, ANCHOR - TILT STOP LEVER
35	61012		1	LEVER, REVERSE LOCK
36	26092		1	ROD, REVERSE LOCK LEVER
37	23-26841		2	BUSHING, NYLON - REVERSE LOCK LEVER ROD
38	18-45882		1	COTTER PIN, REVERSE LOCK LEVER TO ROD
39	61007		1	RETAINER, ROD - REVERSE LOCK

DRIVE SHAFT HOUSING ASSEMBLY

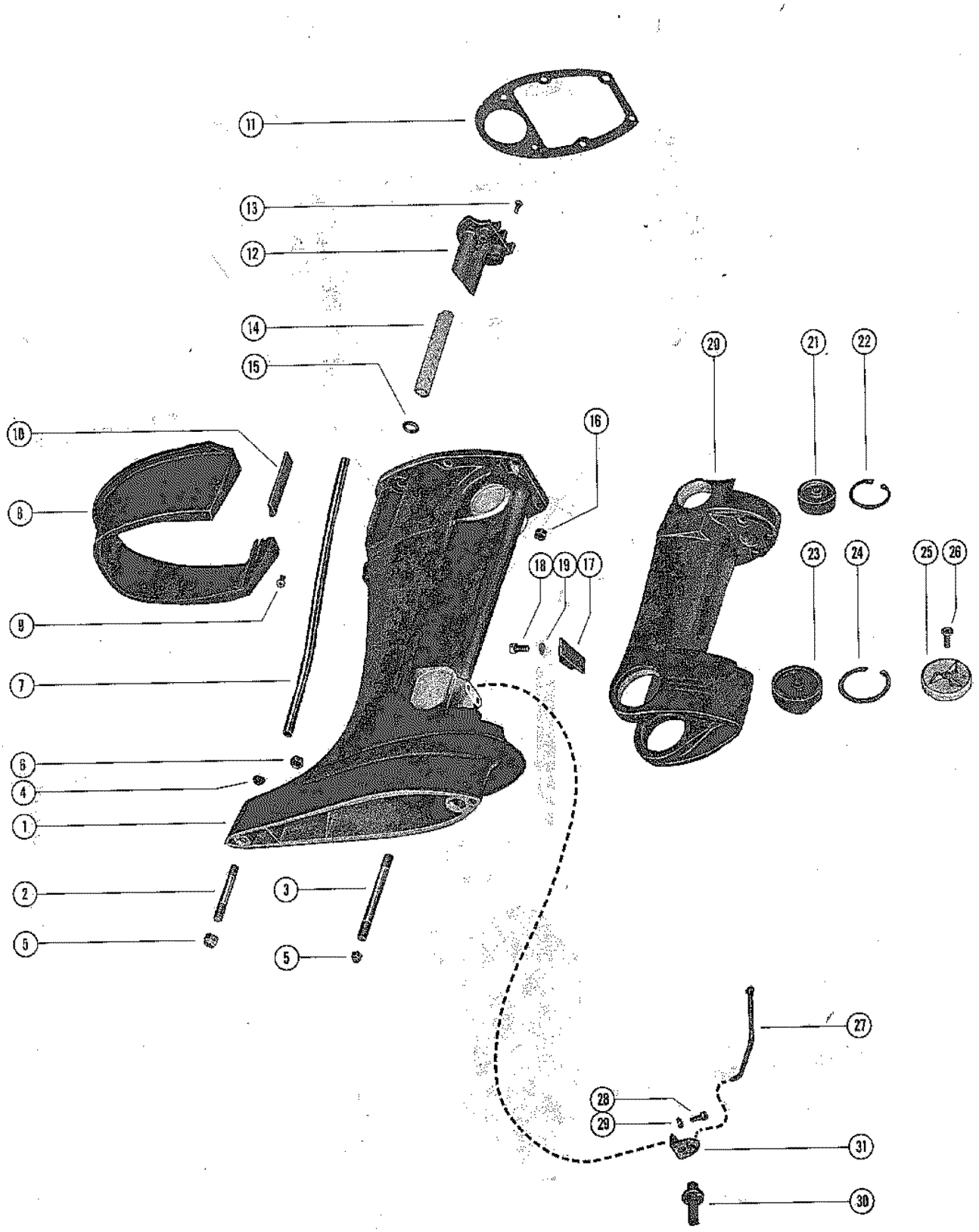

DRIVE SHAFT HOUSING ASSEMBLY

REF. NO.	PART NO.	SYM.	QTY.	DESCRIPTION
1	1561-4691A2		1	DRIVE SHAFT HOUSING, ASSEMBLY (SHORT SHAFT)
	1560-4690A2		1	DRIVE SHAFT HOUSING ASSEMBLY (LONG SHAFT)
2	16-56299		1	STUD, DRIVE SHAFT HSG. TO GEAR HSG. (2 5/16")
3	16-58134		1	STUD, DRIVE SHAFT HSG. TO GEAR HSG. (3 15/16")
4	19-32298		1	PLUG, DRIVE SHAFT HOUSING STUD
5	11-35814		2	NUT, DRIVE SHAFT HOUSING STUD
6	11-34863		1	NUT, GEAR HOUSING TO DRIVE SHAFT HOUSING SUTD
7	32-39586		1	TUBE, WATER OUTLET (SHORT SHAFT)
	32-39587		1	TUBE, WATER OUTLET (LONG SHAFT)
8	39301		1	COVER, TRIM - DRIVE SHAFT HOUSING
9	10-35012		3	SCREW, TRIM COVER TO BOTTOM COWL (5/8")
10	39353		2	SEAL, RUBBER - TRIM COVER
11	27-39402		1	GASKET, MOUNTING PLATE TO DRIVE SHAFT HOUSING
12	39492		1	PLATE, IDLE RELIEF
13	10-35519		2	SCREW, IDLE RELIEF PLATE TO DRIVE SHAFT HOUSING (1/2")
14	32-45054		2	TUBE, NYLON - IDLE RELIEF TUBE
15	25-20195		23	"O" RING, IDLE RELIEF TUBE
16	11-46793		4	NUT, POWERHEAD STUDS
	11-29250		2	NUT, POWERHEAD STUDS
17	33420		1	BUMPER, RUBBER -SADDLE
18	10-31716		2	SCREW, RUBBER BUMPER TO SADDLE (5/8")
19	13-26992		2	LOCKWASHER, RUBBER BUMPER SCREW
20	1562-4692		1	SADDLE
21	33975		2	MOUNT, RUBBER - UPPER (SHORT SHAFT)
	25150		2	MOUNT, RUBBER - UPPER (LONG SHAFT)
22	53-23720		2	RING, RETAINING - UPPER MOUNT
23	33976		2	MOUNT, RUBBER - LOWER (SHORT SHAFT)
	28281		2	MOUNT, RUBBER - LOWER (LONG SHAFT)
24	53-23721		2	RING, RETAINING - LOWER MOUNT
25	53040		2	COVER, LOWER MOUNT
26	10-28638		2	SCREW, LOWER MOUNT COVER FASTENING (3/4")
27	61006		1	LINK ROD, REVERSE LOCK
28	10-61010		2	SCREW, CAM RETAINER TO DRIVE SHAFT HOUSING (3/4")
29	13-26992		2	LOCKWASHER, CAM RETAINER SCREW
30	61011		1	CAM, REVERSE LOCK
31	61008		1	RETAINER, REVERSE LOCK CAM

GEAR HOUSING ASSEMBLY, COMPLETE (PAGE 1)

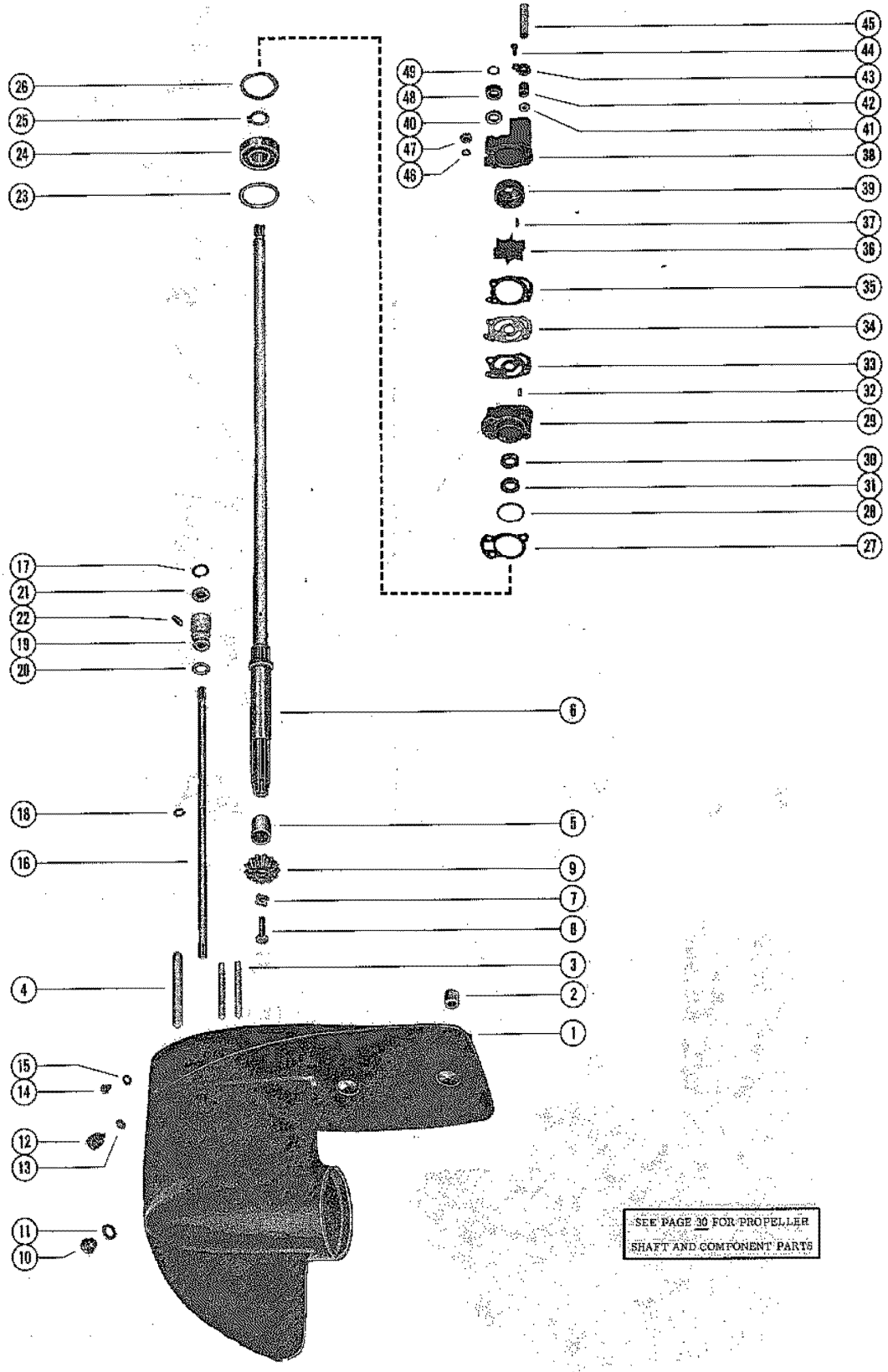

GEAR HOUSING ASSEMBLY, COMPLETE (PAGE 1)

REF. NO.	PART NO.	SYM.	QTY.	DESCRIPTION
-	**1627-4404A4**		**1**	**GEAR HOUSING ASSEMBLY, COMPLETE (SHORT SHAFT) A-1627-4404A4 AND 1-1627-4404A5 GEAR HOUSING ASSEMBLIES, COMPLETE, INCLUDE ALL PARTS FROM REFERENCE #1 THRU REFERENCE 73.**
-	**1627-4404A5**		**1**	**GEAR HOUSING ASSEMBLY, COMPLETE (LONG SHAFT) A-1627-4404A4 AND 1-1627-4404A5 GEAR HOUSING ASSEMBLIES, COMPLETE, INCLUDE ALL PARTS FROM REFERENCE #1 THRU REFERENCE 73.**
1	1627-4404A6		1	GEAR HOUSING ASSEMBLY
2	17-20201		1	PIN, DOWEL - GEAR HOUSING TO DRIVE SHAFT HOUSING
3	16-58137		3	STUD, WATER PUMP TO GEAR HOUSING (3 1/8")
4	16-58135		1	STUD, GEAR HOUSING TO DRIVE SHAFT HOUSING (4 13/16")
5	31-28157		1	BEARING, ROLLER - DRIVE SHAFT
6	45-56792A1		1	DRIVE SHAFT ASSEMBLY (SHORT SHAFT)
	45-56793A1		1	DRIVE SHAFT ASSEMBLY (LONG SHAFT)
7	14-49911		1	TAB WASHER, PINION GEAR SCREW
8	10-49908		1	SCREW, PINION GEAR TO DRIVE SHAFT (3/4")
9	43-45189		1	GEAR, PINION
10	10-28634		1	SCREW, GREASE FILLER (1/4")
11	12-20260		1	WASHER, GREASE FILLER SCREW
12	19-48750		1	PLUG, GEAR HOUSING FLUSHING
13	12-49221		1	WASHER, NEOPRENE - GEAR HOUSING FLUSHING PLUG
14	10-28653		1	SCREW, GREASE VENT (1/4")
15	12-20262		1	WASHER, GREASE VENT SCREW
16	56829A1		1	SHAFT ASSEMBLY, SHIFT - LOWER (SHORT SHAFT)
	56830A1		1	SHAFT ASSEMBLY, SHIFT - LOWER (LONG SHAFT)
17	25-38933		1	"O" RING, LOWER SHIFT SHAFT
18	53-22899		1	RING, RETAINING - SHIFT SHAFT
19	23-30676A1		1	BUSHING ASSEMBLY, SHIFT SHAFT
20	25-26802		1	"O" RING, SHIFT SHAFT BUSHING
21	26-30696		1	OIL SEAL, SHIFT SHAFT BUSHING
22	10-39149		1	SCREW, SHIFT SHAFT BUSHING RETAINER (1/2")
23	15-20804A1		AR	SHIM, BALL BEARING TO GEAR HOUSING (.002-3-5-10)
24	30-47158		1	BEARING, BALL - DRIVE SHAFT
25	53-33463		1	RING, RETAINING - BALL BEARING
26	15-20804A1		AR	SHIM, GEAR HOUSING TO WATER PUMP BASE (.002-3-5-10)
27	27-39626		1	GASKET, WATER PUMP BASE TO GEAR HOUSING
28	25-33466		1	"O" RING, WATER PUMP BASE
29	46-48744A1		1	WATER PUMP BASE
30	26-20070		1	OIL SEAL, WATER PUMP BASE
31	26-33467		1	OIL SEAL, WATER PUMP BASE (SPRING LOADED)
32	17-35973		2	PIN, DOWEL - WATER PUMP BASE TO WATER PUMP BODY

CONTINUED ON NEXT PAGE ➠

GEAR HOUSING ASSEMBLY, COMPLETE (PAGE 1)

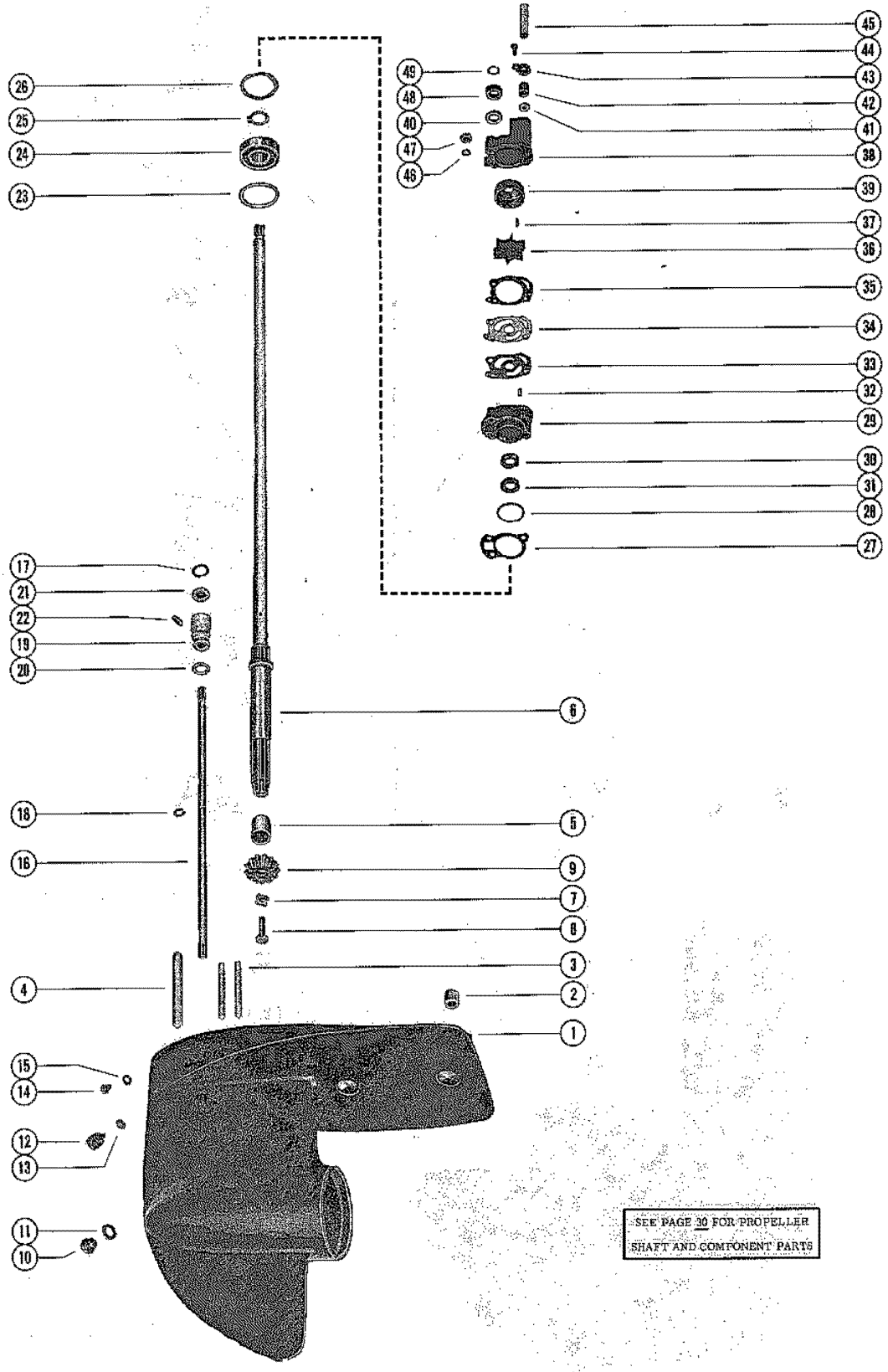

GEAR HOUSING ASSEMBLY, COMPLETE (PAGE 1)

REF. NO.	PART NO.	SYM.	QTY.	DESCRIPTION
33	27-39625		1	GASKET, WATER PUMP BASE TO FACE PLATE (LOWER)
34	39624		1	PLATE, FACE - WATER PUMP BASE TO WATER PUMP BODY
35	27-39623		1	GASKET, FACE PLATE TO WATER PUMP BODY (UPPER)
36	47-56780		1	IMPELLER, WATER PUMP PART OF DRIVE SHAFT ASSEMBLY **PART OF DRIVE SHAFT ASSEMBLY**
37	28-56661		1	KEY, IMPELLER DRIVE PART OF DRIVE SHAFT ASSEMBLY **PART OF DRIVE SHAFT ASSEMBLY**
38	46-48749A2		1	WATER PUMP BODY ASSEMBLY
39	48754		1	INSERT, PUMP BODY
40	26-20070		1	OIL SEAL, WATER PUMP BODY
41	12-36555		1	WASHER, NYLON - WATER PUMP BODY
42	26-25329		1	SEAL, WATER PUMP BODY
43	45010		1	RETAINER, WATER PUMP BODY SEAL
44	10-56396		1	SCREW, SEAL RETAINER TO WATER PUMP BODY (1 1/8")
45	23-45170		1	SLEEVE, GUIDE - WATER INLET TUBE
46	12-36001		3	WASHER, WATER PUMP STUDS
47	11-45592		3	NUT, WATER PUMP STUDS
48	12-20684		1	RING, RUBBER - CENTRIFUGAL SLINGER (DRIVE SHAFT)
49	25-26802		1	"O" RING, UPPER - DRIVE SHAFT

GEAR HOUSING ASSEMBLY, COMPLETE (PAGE 2)

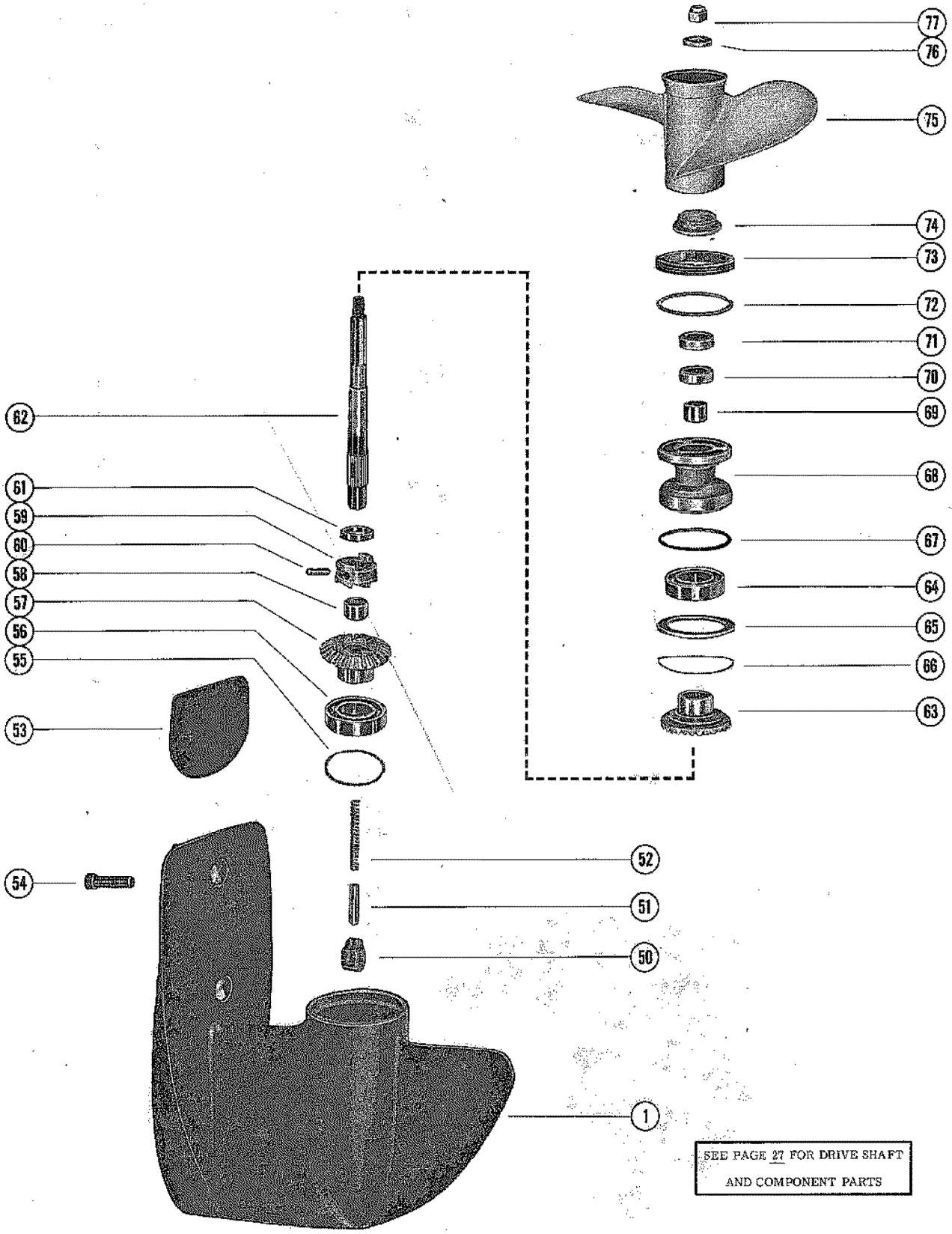

GEAR HOUSING ASSEMBLY, COMPLETE (PAGE 2)

REF. NO.	PART NO.	SYM.	QTY.	DESCRIPTION
-	**1627-4404A4**		**1**	**GEAR HOUSING ASSEMBLY COMPLETE (SHORT SHAFT) A-1627-4404A4 AND 1-1627-4404A5, GEAR HOUSING ASSEMBLIES, COMPLETE, INCLUDE ALL PARTS FROM REFERENCE #1 THRU REFERENCE #73.**
-	**1627-4404A5**		**1**	**GEAR HOUSING ASSEMBLY COMPLETE (LONG SHAFT) A-1627-4404A4 AND 1-1627-4404A5, GEAR HOUSING ASSEMBLIES, COMPLETE, INCLUDE ALL PARTS FROM REFERENCE #1 THRU REFERENCE #73.**
-	**1627-4404A6**		**0**	**GEAR HOUSING ASSEMBLY SEE PAGE Gear Housing Assembly, Complete (Page1) section.**
-	**1627-4404A6**		**1**	**GEAR HOUSING ASSEMBLY**
50	58975		1	CAM, SHIFT
51	33438		1	FOLLOWER, CAM
52	24-33479		1	SPRING, CAM FOLLOWER
53	47820A1		1	PLATE ASSEMBLY, ANADOC - GEAR HOUSING
54	10-47819		1	SCREW, ANODIC PLATE TO GEAR HOUSING (1 1/4")
55	15-20788A1		AR	SHIM, BALL BEARING TO GEAR HOUSING (.002-3-5-10)
	30-25398		0	
56	30-25398		1	BEARING, BALL - FORWARD GEAR
57	43-45227		1	FORWARD GEAR ASSEMBLY
58	31-28157		1	BEARING, ROLLER - FORWARD GEAR
59	52-53518A1		1	RATCHET ASSEMBLY, SLIDING CLUTCH
60	17-53372		1	PIN, CROSS - RATCHET TO PROPELLER SHAFT
61	24-53373		1	SPRING, RETAINING - CROSS PIN
62	44-34238A2		1	PROPELLER SHAFT ASSEMBLY INCLUDES REF #74 ------ A-23-34237
63	43-45229		1	REVERSE GEAR ASSEMBLY
64	30-25398		1	BEARING, BALL - REVERSE GEAR
65	12-33434		1	WASHER, THRUST - REVERSE GEAR
66	15-33431A1		AR	SHIM, THRUST WASHER TO GEAR HOUSING (.002-3-5-10)
67	25-33465		1	"O" RING, BEARING CARRIER
68	33402A1		1	BEARING CARRIER ASSEMBLY
69	31-28157		1	BEARING, ROLLER - BEARING CARRIER
70	26-27163		1	OIL SEAL, BEARING CARRIER (SPRING LOADED)
71	26-26805		1	OIL SEAL, BEARING CARRIER
72	12-33432		1	WASHER, GEAR HOUSING COVER
73	33410		1	COVER, GEAR HOUSING
74	23-34237		1	COLLAR, GUIDE - PROPELLER SHAFT **PART OF PROPELLER SHAFT ASSEMBLY**
75	48-33480A1		1	PROPELLER ASSEMBLY (2 BLADE - ALUMINUM - 11" PITCH) **SHIPPED WITH ENGINE FROM FACTORY**

CONTINUED ON NEXT PAGE ➠

GEAR HOUSING ASSEMBLY, COMPLETE (PAGE 2)

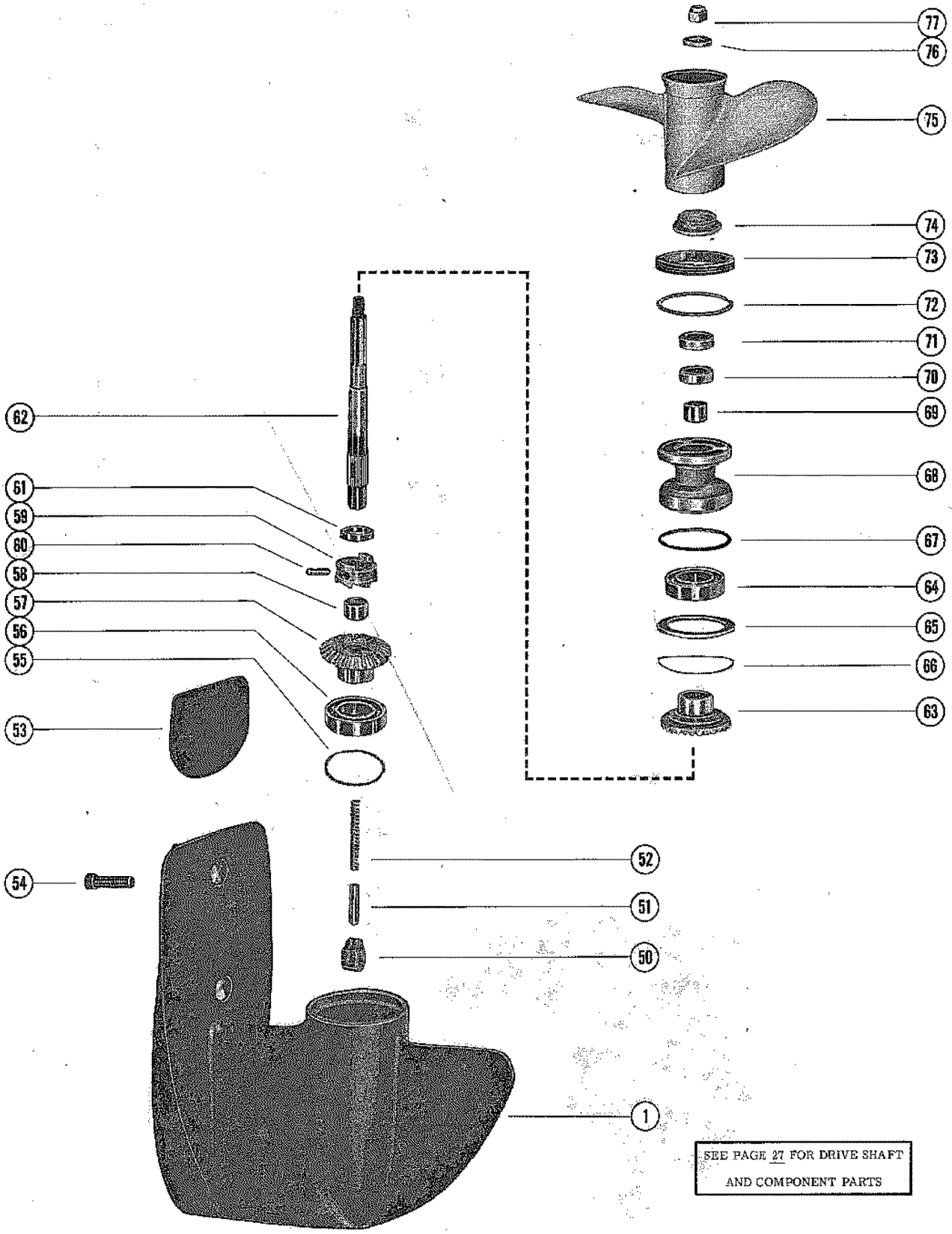

GEAR HOUSING ASSEMBLY, COMPLETE (PAGE 2)

REF. NO.	PART NO.	SYM.	QTY.	DESCRIPTION
75	48-34402A1		OPT	PROPELLER ASSEMBLY (2 BLADE - BRONZE - 11" PITCH)
	48-33482A1		OPT	PROPELLER ASSEMBLY (3 BLADE - ALUMINUM - 9" PITCH)
	48-37316A1		OPT	PROPELLER ASSEMBLY (3 BLADE - ALUMINUM - 7" PITCH)
76	23-27024		1	SPACER, SPLINE - PROPELLER SHAFT
77	11-34933		1	NUT, PROPELLER RETAINING

PARTS INDEX

Part Number	Description	Pg.	Ref. No.
20155	RETAINER, STARTER SPRING	5	14
20162	PAUL, STARTER	5	19
20164	PLATE< RETAINER - STARTER PAWL	5	24
20203	DISC, FRICTION - CLAMP PLATE AND SWIVEL BRACKET	39	26
22477A4	THUMB SCREW ASSEMBLY	39	2
22833	ADAPTOR, CHECK UNIT	21	23
23069	STEM, CHECK UNIT ADAPTOR	21	22
25150	MOUNT, RUBBER - UPPER (LONG SHAFT)	43	21
26092	ROD, REVERSE LOCK LEVER	41	36
26179	RETAINER, STARTER SHEAVE TO PLATE	5	21
28281	MOUNT, RUBBER - LOWER (LONG SHAFT)	43	23
28748	RETAINER, STARTER CABLE AND HANDLE	7	39
29359	LUBRICAP, SWIVEL BRACKET GREASE FITTING	39	22
29359	LUBRICAP, SWIVEL BRACKET GREASE FITTING	39	22
30188	CUP WASHER, ADAPTOR	21	19
30413	HOOK, COWL LATCH FASTENING	3	11
30685	TILT TUBE, CLAMP BRACKET TO SWIVEL BRACKET	39	4
30782	HANDLE, STARTER CABLE	7	38
33402A1	BEARING CARRIER ASSEMBLY	49	68
33410	COVER, GEAR HOUSING	49	73
33420	BUMPER, RUBBER -SADDLE	43	17
33423	CO-PILOT DISC	39	16
33438	FOLLOWER, CAM	49	51
33513	RETAINER, WATER INLET TUBE SEAL	37	4
33973	SWIVEL, THROTTLE LINK	11	24
33975	MOUNT, RUBBER - UPPER (SHORT SHAFT)	43	21
33976	MOUNT, RUBBER - LOWER (SHORT SHAFT)	43	23
38938	BOOT, CABLE	13	33
38938	BOOT, LEAD ASSEMBLY	11	31
38950A1	COVER ASSEMBLY, STOP SWITCH	37	28
39058	SEAL, SHIFT HANDLE - BOTTOM COWL	37	19
39180	ELBOW, TELL TALE HOSE TO CYLINDER BLOCK C-22-25885 IS PART O	37	21
39301	COVER, TRIM - DRIVE SHAFT HOUSING	43	8
39307	PLATE, CLAMP - CO-PILOT	39	23
39308	PLATE, BAFFLE - EXHAUST MANIFOLD	29	41
39353	SEAL, RUBBER - TRIM COVER	43	10
39399	BRACKET, MOUNTING - SHIFT SHAFT	23	4
39400	SHIELD, REAR - TOP COWL	3	6
39415	LEVER, SHIFT CONTROL	23	14
39492	PLATE, IDLE RELIEF	43	12
39588	CAM, DETENT - SHIFT SHAFT	23	11
39591	PAD, SOUND - COVER PLATE	37	13
39601	PLATE, DETENT SPRING	23	8
39606	BLAKNET, SOUND ABSORBING - WRAP AROUND COWL	3	9
39622	SEAL, MOUNTING PLATE TO BOTTOM COWL	37	7
39624	PLATE, FACE - WATER PUMP BASE TO WATER PUMP BODY	47	34
39628	BUTTON, FRONT COVER RELEASE - TOP COWL	3	12
39630	CUSHION, RUBBER - BOTTOM COWL	37	15
39632	SHAFT< SHIFT (HORIZONTAL)	23	16
39778	BOOT, FUEL ADAPTOR - BOTTOM COWL	37	17
39780	BOOT, SHIFT CABLE - BOTTOM COWL	37	18
39936	BLANKET, SOUND ABSORBING - FRONT COVER	3	24
45010	RETAINER, WATER PUMP BODY SEAL	47	43
45481	SHAFT, SHEAVE	5	26
46266A2	COVER PLATE ASSEMBLY, BOTTOM COWL	37	12
46387	>CLUSTER< THROTTLE	15	20
46405	LINK, THROTTLE CLUSTER	25	24
46413	THROTTLE LEVER, VERTICAL SHAFT	25	12
46785A1	COWL LATCH ASSEMBLY	3	10
46837	STOP, OVER-SPEED LIMITER	23	29
47422	BRACKET< MOUNTING - TOP COWL (FRONT)	5	33
47430	BUMPER, RUBBER - STARTER HOUSING	5	6
47604A1	PROTECTOR ASSEMBLY, SPARK PLUG	9	19
47820A1	PLATE ASSEMBLY, ANADOC - GEAR HOUSING	49	53
47899A9	LEAD ASSEMBLY, HIGH TENSION	9	17
47932	KNOB AND SHAFT, CHOKE	19	1
47933	LEVER, CHOKE SHUTTER	19	4

Part Number	Description	Pg.	Ref. No.
48472	COVER, HARNESS HOLE	37	10
48662	HOUSING, THROTTLE CONTROL	25	3
48754	INSERT, PUMP BODY	47	39
48755A1	FLUSHING ASSEMBLY	1	-
52580	COVER, TRANSFER PORT	27	32
52889	NOZZLE, TELL TALE HOSE TO BOTTOM COWL S	37	22
53040	COVER, LOWER MOUNT	43	25
53111	RETAINER, PULLEY SCREW	5	9
53238A3	FUEL PUMP ASSEMBLY	21	1
53241	BASE, FUEL PUMP	21	6
53245A1	DIAPHRAGM KIT, FUEL PUMP	21	3
53544	BRACKET, FUEL PUMP TO CRANKCASE	21	11
54676	RETAINER, HIGH TENSION LEAD	9	16
55851	LEVER, TILT STOP	39	29
55860	PULLEY, STARTER CABLE	5	7
56305	BRACKET, MOUNTING - TOP COWL (REAR)	5	27
56316A3	CABLE ASSEMBLY, STATOR HOUSING (WHITE - 12 3/4")	11	32
56317A4	CABLE ASSEMBLY< STATOR HOUSING (BROWN - 16 1/4")	13	32
56318A5	LEAD ASSEMBLY, MODULE TO IGNITION COIL (GREEN - 13 7/8")	11	30
56318A6	LEAD ASSEMBLY, MODULE TO IGNITION COIL (GREEN - 10 3/4")	11	29
56319A3	LEAD ASSEMBLY, STOP SWITCH (SALMON - 24 3/16")	11	26
56700	LEVER, STATOR PLATE CONTROL	25	17
56757A1	JUMPER WIRE ASSEMBLY, CONDENSER TO EXHAUST COVER (BLACK - 6	11	28
56757A2	GROUND WIRE ASSEMBLY, EXHAUST COVER TO BOTTOM COWL	29	47
56762	STA-STRAP	13	36
56829A1	SHAFT ASSEMBLY, SHIFT - LOWER (SHORT SHAFT)	45	16
56830A1	SHAFT ASSEMBLY, SHIFT - LOWER (LONG SHAFT)	45	16
57031A2	HOUSING ASSEMBLY, STARTER	5	1
57576	COVER, EXHAUST MANIFOLD	29	43
57927	MOUNT, RUBBER - FRONT MOUNTING BRACKET TO CRANKCASE	7	35
58657	INSERT, ROPE GUIDE - TOP COWL	3	2
58975	CAM, SHIFT	49	50
58978A2	PLATE ASSEMBLY, MOUNTING	37	1
58979	FOLLOWER, NEUTRAL SPEED LIMITER	23	23
59060	BOOT, LEAD ASSEMBLY	11	27
59065A1	STOP SWITCH ASSEMBLY	37	24
59107	HANDLE, NYLON - SHIFT CONTROL	23	1
59710	BRACKET, LINK ROD TO STATOR PLATE	11	20
59783	LINK, THROTTLE - STATOR ASSEMBLY	11	22
60850	ARM, STEERING HANDLE	35	6
60850A3	STEERING HANDLE ASSEMBLY, COMPLETE	35	-
60851	SHAFT, THROTTLE	35	3
60853	HANDLE, THROTTLE SHAFT	35	4
60854	GRIP, HANDLE - THROTTLE	35	1
60857A2	UNIVERSAL JOINT ASSEMBLY	35	12
60864	LEVER, STATOR PLATE - VERTICAL SHAFT	25	16
60865	CATCH, FRON COVER - TOP COWL	3	15
60866	HOOK, FRONT COVER LATCH	3	21
60867A1	BASE ASSEMBLY, FRONT COVER LATCH	3	18
60886	BOOT, THROTTLE CABLE - BOTTOM COWL	37	16
61006	LINK ROD, REVERSE LOCK	43	27
61007	RETAINER, ROD - REVERSE LOCK	41	39
61008	RETAINER, REVERSE LOCK CAM	43	31
61009A1	SHIFT CONTROL SHAFT ASSEMBLY, VERTICAL	23	20
61011	CAM, REVERSE LOCK	43	30
61012	LEVER, REVERSE LOCK	41	35
61105A1	SHUTTER, CHOKE - CARBURETOR	19	5
61107A1	BRACKET, STEERING ARM	35	15
61532	COVER, IGNITION COIL	9	13
61541	COVER, FUEL PUMP	21	7
62054	PLATE, CLAMP - CO-PILOT	39	23
62251	CAP, HANDLE THROTTLE	35	2
10-20100	SCREW, PLATE AND SPRING TO MOUNTING BRACKET (1/2")	23	9
10-20540	SCREW, TETAINER TO MOUNTING PLATE (5/8")	37	5
10-20653	SCREW, THROTTLE CONTROL HOUSING FASTENING (1") - LOWER	25	5
10-20847	SCREW, THROTTLE CLUSTER	15	19

PARTS INDEX

Part Number	Description	Pg.	Ref. No.
10-21091	SCREW, THROTTLE CONTROL HOUSING FASTENING (1 1/8") - UPPER	25	7
10-21449	SCREW, CRANKCASE TO CYLINDER BLOCK (2")	27	21
10-22421	SCREW, MOUNTING BRACKET TO POWERHEAD PLATE (1 1/4")	23	5
10-22523	SCREW, FRONT COVER LATCH TO TOP COWL (3/4")	3	16
10-22659	SCREW, STARTER HOUSING TO CRANKCASE (1 5/8")	5	4
10-22659	SCREW, STARTER HOUSING TO CRANKCASE (1 5/8")	25	18
10-22960	SCREW, VERTICAL SHAFT THROTTLE LEVER (1 3/8")	25	13
10-23178	SCREW, PLUG - MAIN NOZZLE	15	30
10-24644	SCREW, FOLLOWER TO POWERHEAD MOUNTING PLATE (1 3/8")	23	24
10-24644	SCREW, STARTER HOUSING TO CRANKCASE (1 3/8")	5	4
10-24644	SCREW< COVER TO CYLINDER BLOCK (1 3/8")	29	37
10-24646	SCREW, TRANSFER PORT COVER TO CYLINDER BLOCK (5/8")	29	34
10-24786	SCREW, CRANKCASE TOP TO CYLINDER BLOCK (5/8")	27	10
10-25612	SCREW, DRIVE - SERIAL PLATE TO SWIVEL BRACKET	39	28
10-25822	>SCREW, STRAINER COVER	15	18
10-25876	SCREW< THROTTLE CLUSTER LINK (7/8")	25	25
10-26065	SCREW, CRANKCASE TO CYLINDER BLOCK (1")	27	21
10-26066	SCREW, CRANKCASE TO CYLINDER BLOCK (1 1/4")	27	20
10-26132	SCREW, CO-PILOT DISC TO SADDLE (2 1/2")	39	17
10-26132	SCREW, CRANKCASE TO CYLINDER BLOCK (2 1/2")	27	22
10-26132	SCREW, STEERING ARM BRACKET TO SADDLE (2 1/2")	35	18
10-26483	BOLT, CLAMP BRACKET TO TRANSOM (2 3/4")	39	7
10-26801	SCREW, LOCK - CENTER MAIN BEARING (5/8")	27	24
10-27791	SCREW, ANCHOR - TILT STOP LEVER	41	34
10-28405	SCREW, PLUG - MAIN FUEL JET CHANNEL	15	34
10-28634	SCREW, GREASE FILLER (1/4")	45	10
10-28636	SCREW, TRANSFER PORT COVER TO CYLINDER BLOCK (3/4")	27	34
10-28638	SCREW, LOWER MOUNT COVER FASTENING (3/4")	43	26
10-28653	SCREW, GREASE VENT (1/4")	45	14
10-28782	SCREW, MANIFOLD COVER TO CYLINDER BLOCK (7/8")	29	44
10-28845	SCREW, PLUG - BODY CHANNEL	15	28
10-29200	SCREW, BRACKET TO FUEL PUMP (5/8")	21	12
10-29237	SCREW, RETAINING - LEVER TO SWIVEL BRACKET	39	30
10-29722	SCREW, BRACKET TO STATOR (5/8")	11	21
10-30663	SCREW, COVER PLATE TO BOTTOM COWL (3/8")	37	14
10-30663	SCREW, GROUND LEAD TO EXHAUST COVER (3/8")	29	48
10-30663	SCREW, GROUND WIRE TO MOUNTING BRACKET (3/8")	5	32
10-30663	SCREW, SPRING TO LIMITER FOLLOWER (3/8")	23	28
10-31716	SCREW, RUBBER BUMPER TO SADDLE (5/8")	43	18
10-32417	SCREW, RATCHET TO FLYWHEEL (5/8")	9	4
10-32627	SCREW, FUEL PUMP TO BASE (1 1/2")	21	8
10-35012	SCREW, TRIM COVER TO BOTTOM COWL (5/8")	43	9
10-35400	SCREW, HOLD DOWN PLATE TO STATOR (7/16")	11	15
10-35519	SCREW, IDLE RELIEF PLATE TO DRIVE SHAFT HOUSING (1/2")	43	13
10-35519	SCREW, TELL TALE NOZZLE TO BOTTOM COWL (1/2")	37	23
10-35563	SCREW, RATCHET TO FLYWHEEL (9/16")	9	3
10-36046	SCREW, MODULE - COIL LEADS (1/4")	11	5
10-37370	SCREW< REAR SHIELD TO TOP COWL (5/8")	3	7
10-37562	SCREW, FRONT MOUNTING BRACKET TO BOTTON COWL (1")	5	34
10-37562	SCREW, REAR MOUNTING BRACKET TO BOTTOM COWL (1")	5	28

Part Number	Description	Pg.	Ref. No.
10-37892	SCREW, PULLEY TO STARTER HOUSING (1")	5	8
10-39149	SCREW, SHIFT SHAFT BUSHING RETAINER (1/2")	45	22
10-45379	SCREW, CONNECTING ROD	33	2
10-45775	SCREW, CENTER MAIN BEARING CLAMPING (9/16")	31	5
10-45862	SCREW, FUEL PUMP BRACKET TO CRANKCASE (7/8")	21	13
10-46898	SCREW, LIMITER STOP TO FOLLOWER (7/16")	23	31
10-47819	SCREW, ANODIC PLATE TO GEAR HOUSING (1 1/4")	49	54
10-48409	SCREW, LATCH BASE TO FRONT COVER (5/8")	3	19
10-49908	SCREW, PINION GEAR TO DRIVE SHAFT (3/4")	45	8
10-52195	SCREW, FLOAT BOWL COVER (SHORT)	15	10
10-52196	SCREW, FLOAT BOWL COVER (LONG)	15	11
10-53481	SCREW, REED STOP MOUNTING (9/16")	31	9
10-53852	SCREW, CLIP ASSEMBLY TO END CAP (5/8")	27	8
10-56214	SCREW, STEERING HANDLE TO ARM BRACKET (5/8")	35	11
10-56266	SCREW, MAKER TO STATOR HOUSING (3/8")	11	19
10-56354	SCREW, CHECK UNIT ADAPTOR TO BOTTOM COWL (2 1/2")	21	24
10-56396	SCREW, SEAL RETAINER TO WATER PUMP BODY (1 1/8")	47	44
10-56784	SCREW, CLAMP PLATE TO SWIVEL BRACKET (1")	39	24
10-59800	SCREW, MODULE TO STATOR (9/16")	11	4
10-59800	SCREW, MODULE TO STATOR (9/16")	11	4
10-59800	SCREW, MODULE TO STATOR (9/16")	11	4
10-59800	SCREW, MODULE TO STATOR (9/16")	11	4
10-59800	SCREW< MODULE TO STATOR (9/16")	11	4
10-60491	SCREW, COVER TO MODULE (5/8')	11	2
10-61010	SCREW, CAM RETAINER TO DRIVE SHAFT HOUSING (3/4")	43	28
10-61531	SCREW, COIL COVER TO REAR SUPPORT BRACKET (3 3/4")	9	14
10-61802	SCREW, COVER TO BOTTOM COWL (7/8")	37	11
10-62233	SCREW, DETENT SPRING TO STEERING ARM BRACKET (5/8")	35	16
10-62269	SCREW< CONDENSER ATTACHING (7/16")	11	12
11-20061	NUT, CONNECTION ROD SCREW	33	4
11-20110	NUT, CARBURETOR SCREEN STUD	19	11
11-20110	NUT, CHOKE SHUTTER STUD	19	8
11-20110	NUT, COIL COVER SCREW	9	15
11-20110	NUT, PULLEY SCREW	5	11
11-20110	NUT, REED STOP MOUNTING SCREW	31	10
11-20166	NUT, SHEAVE SHAFT (LEFT HAND THREAD)	5	13
11-20361	NUT, RUBBER MOUNT TO BRACKET AND CRANKCASE	7	36
11-20361	NUT, RUBBER MOUNT TO BRACKET AND CYLINDER BLOCK	5	30
11-20361	NUT, SECTOR GEAR TO SHIFT SHAFT	23	19
11-20361	NUT, STARTER HOUSING TO CRANKCASE SCREW	5	5
11-20361	NUT, STARTER HOUSING TO CRANKCASE SCREW	25	21
11-20586	NUT, SHAFT AND GEAR	25	23
11-20645	NUT, JAM - THROTTLE CLUSTER LINK SCREW	25	26
11-20645	NUT, STATOR LEAD TO STOP SWITCH	37	30
11-22339	NUT, FLYWHEEL	9	9
11-25168	NUT, VERTICAL SHAFT THROTTLE LEVER SCREW	25	14
11-26484	NUT, CLAMP BRACKET SCREW	39	9
11-28770	NUT, CLAMP BRACKET STUD	39	14
11-29250	NUT, POWERHEAD STUDS	43	16
11-30499	NUT, TILT TUBE FASTENING	39	6
11-34863	NUT, GEAR HOUSING TO DRIVE SHAFT HOUSING SUTD	43	6
11-34933	NUT, PROPELLER RETAINING	51	77
11-35814	NUT, DRIVE SHAFT HOUSING STUD	43	5
11-35814	NUT, TOP COWL STUD	3	5
11-39305	NUT, SHIFT CONTROL HANDLE TO SHIFT SHAFT	23	3
11-45076	NUT, IGNITION COIL TERMINAL	9	12
11-45076	NUT, MODULE - IGNITION COIL LEAD TERMINALS	11	7

PARTS INDEX

Part Number	Description	Pg.	Ref. No.
11-45592	NUT, WATER PUMP STUDS	47	47
11-45812	NUT, THROTTLE LINK	11	25
11-46438	NUT, FUEL PUMP BRACKET SCREW	21	14
11-46793	NUT, CO-PILOT DISC TO SADDLE SCREW	39	18
11-46793	NUT, CRANKCASE SCREW	27	23
11-46793	NUT, CRANKCASE STUD	27	15
11-46793	NUT, POWERHEAD STUDS	43	16
11-46793	NUT, STEERING ARM BRACKET FASTENING SCREW	35	19
11-46887	NUT, CYLINDER BLOCK COVER SCREW	29	39
11-46887	NUT, LIMITER FOLLOWER SCREW	23	26
11-46887	NUT, MOUNTING BRACKET SCREW	23	6
11-46887	NUT, THROTTLE CONTROL HOUSING SCREW	25	6
11-46887	NUT, THROTTLE CONTROL HOUSING SCREW	25	8
11-46887	NUT, TILT STOP LEVER SCREW	39	33
11-56325	NUT, CABLE INSULATOR	13	35
12-20128	WASHER, FUEL PUMP SCREWS	21	9
12-20214	WASHER, THUMB SCREW	39	3
12-20260	WASHER, GREASE FILLER SCREW	45	11
12-20262	WASHER, GREASE VENT SCREW	45	15
12-20684	RING, RUBBER - CENTRIFUGAL SLINGER (DRIVE SHAFT)	47	48
12-24664	WASHER, SHAFT AND GEAR	25	22
12-24676	WASHER, LIMITER STOP SCREW	23	30
12-26014	WASHER, LATCH BASE SCREW	3	20
12-26485	WASHER, CLAMP BRACKET SCREW	39	8
12-29245	WASHER, FRONT COVER RELEASE BUTTON	3	14
12-29245	WASHER, SHIFT CONTROL HANDLE	23	2
12-29245	WASHER< SHIFT SHAFT	23	18
12-30164	WASHER, THROTTLE LINK	11	23
12-30314	WASHER, NYLON - CHOKE KNOW AND SHAFT	19	2
12-33432	WASHER, GEAR HOUSING COVER	49	72
12-33434	WASHER, THRUST - REVERSE GEAR	49	65
12-35559	WASHER, STARTER SHEAVE RETAINER	5	22
12-36001	WASHER, WATER PUMP STUDS	47	46
12-36281	WASHER, FLYWHEEL NUT	9	8
12-36555	WASHER, NYLON - WATER PUMP BODY	47	41
12-47275	WASHER, NEEDLE BEARING RETAINING	33	5
12-48679	WASHER, THROTTLE SHAFT AND GEAR	25	10
12-49221	WASHER, NEOPRENE - GEAR HOUSING FLUSHING PLUG	45	13
12-52864	SHIM, CLAMP BRACKET TILT TUBE	39	5
12-56720	WASHER, CLAMP PLATE SCREW	39	25
12-57029	WASHER, STARTER HOUSING SCREW	25	19
12-59061	WASHER, STATOR LEAD TO STOP SWITCH	37	25
12-62252	WASHER, THROTTLE HANDLE TO STEERING ARM	35	5
13-20160	WASHER, WAVE - STARTER SHEAVE TENSION	5	23
13-20202	LOCKWASHER, CRANKCASE TOP TO CYLINDER BLOCK SCREW	27	11
13-21972	LOCKWASHER, STOP SWITCH CONNECTOR	37	26
13-26992	LOCKWASHER, CAM RETAINER SCREW	43	29
13-26992	LOCKWASHER, RATCHET SCREW	9	5
13-26992	LOCKWASHER, RUBBER BUMPER SCREW	43	19
13-26993	LOCKWASHER, CLAMP BRACKET STUD	39	13
13-26993	LOCKWASHER< STARTER HOUSING TO CYLINDER BLOCK SCREW	5	3
13-26995	LOCKWASHER, FLOAT BOWL COVER SCREW	15	12
13-26996	LOCKWASHER, IGNITION COIL TERMINAL	9	11
13-26996	LOCKWASHER, MODULE - IGNITION COIL LEAD TERMINALS	11	6
13-26996	LOCKWASHER, STATOR LEAD NUT	37	29
13-29720	WASHER, WAVE - STARTER PAWL	5	18
13-36076	WASHER, WAVE - TILT STOP LEVER SCREW	39	31
13-36206	WASHER, WAVE - SHIFT SHAFT	23	13
14-20091	TAB WASHER, CENTER MAIN BEARING LOCK SCREW	27	25
14-20165	TAB WASHER, SHEAVE SHAFT NUT	5	12

Part Number	Description	Pg.	Ref. No.
15-20788A1	SHIM, BALL BEARING TO GEAR HOUSING (.002-3-5-10)	49	55
15-20804A1	SHIM, BALL BEARING TO GEAR HOUSING (.002-3-5-10)	45	23
15-20804A1	SHIM, GEAR HOUSING TO WATER PUMP BASE (.002-3-5-10)	45	26
15-28212010	SHIM, LIMITER FOLLOWER SCREW	23	25
15-33431A1	SHIM, THRUST WASHER TO GEAR HOUSING (.002-3-5-10)	49	66
15-33910015	SHIM, STATOR PLATE TO UPPER END CAP	11	16
15-37711020	SHIM, RETAINING SCREW	39	32
15-48002015	SHIM, STEERING HANDLE PIVOT TO BRACKET (.015)	35	10
15-56191A1	SHIM, CRANKCASE TOP TO CYLINDER BLOCK (.002-3-5-10)	27	9
16-20462	STUD, CRANKCASE TO CYLINDER BLOCK (1 5/16")	27	14
16-20991	STUD, CRANKCASE TO DRIVE SHAFT HOUSING (1 5/8")	27	18
16-20991	STUD, CYLINDER BLOCK TO DRIVE SHAFT HOUSING (1 5/8")	27	17
16-21553	STUD, TOP COWL TO MOUNTING BRACKETS (1 1/2")	3	4
16-23740	STUD, CARBURETOR TO CRANKCASE (1 3/32")	27	19
16-39766	STUD, CYLINDER BLOCK TO DRIVE SHAFT HOUSING (2 1/8")	27	16
16-53050	STUD, CHOKE SHUTTER TO CARBURETOR (1 1/2")	19	7
16-53820	STUD, CARBURETOR SCREEN TO CARBURETOR (1 1/16")	19	10
16-56299	STUD, DRIVE SHAFT HSG. TO GEAR HSG. (2 5/16")	43	2
16-58134	STUD, DRIVE SHAFT HSG. TO GEAR HSG. (3 15/16")	43	3
16-58135	STUD, GEAR HOUSING TO DRIVE SHAFT HOUSING (4 13/16")	45	4
16-58137	STUD, WATER PUMP TO GEAR HOUSING (3 1/8")	45	3
16-59620	STUD, CLAMP BRACKET (8")	39	11
17-20032	DOWEL PIN, CENTER MAIN BEARING	31	3
17-20032	DOWEL PIN, MAIN BEARING TO CYL BLOCK	31	11
17-23784	PIN, DOWEL - CRANKCASE TO CYLINDER BLOCK	27	13
17-24685	PIN, GROOVE - STATOR PLATE LEVER TO VERTICAL SHAFT	25	15
17-25905	PIN, ROLL - DETENT CAM TO SHIFT SHAFT	23	12
17-25905	PIN, ROLL - SHIFT CONTROL LEVER TO SHIFT SHAFT	23	15
17-27088	PIN, BALL GEAR TO THROTTLE SHAFT	35	8
17-27088	PIN, BALL GEAR TO UNIVERSAL JOINT	35	14
17-35973	PIN, DOWEL - WATER PUMP BASE TO WATER PUMP BODY	45	32
17-36325	PIN, THROTTLE SHAFT AND GEAR	25	11
17-39585	SWIVEL PIN	39	15
17-39599	PIN, PIVOT - FRONT COVER LATCH HOOK	3	23
17-53372	PIN, CROSS - RATCHET TO PROPELLER SHAFT	49	60
17-55453	PIN, REED STOP	31	4
17-56373A1	TILT LOCK PIN ASSEMBLY	39	10
18-45882	COTTER PIN, REVERSE LOCK LEVER TO ROD	41	38
19-32298	PLUG, DRIVE SHAFT HOUSING STUD	43	4
19-48750	PLUG, GEAR HOUSING FLUSHING	45	12
21-30430A2	CHECK VALVE ASSEMBLY	21	2
21-56011A2	CHECK VALVE ASSEMBLY	27	27
22-20083	NUT, CARBURETOR MOUNTING SUTDS	17	38
22-21971	NUT, STOP SWITCH TO BOTTOM COWL	37	27
22-22946	SLEEVE, RUBBER - FUEL PUMP INLET FITTING	21	16
22-22948	NUT, FUEL PUMP INLET FITTING	21	17
22-22995	FITTING, INLET - FUEL PUMP	21	15
22-31345	FITTING, GREASE	39	21
22-31345	FITTING, GREASE - SWIVEL BRACKET	39	21
22-53553	ELBOW, HOSE TO CYLINDER BLOCK (45)	21	26
22-54090	ELBOW, HOSE TO FUEL PUMP (90)	21	28
22-61295A5	ELBOW ASSEMBLY, BLEED DRAIN PART OF CYLINDER BLOCK AND CRANK	27	26
22-61558	ELBOW, BLEED DRAIN	27	31
22-61559	TEE, INJECTION	27	30
23-20159	BUSHING, SPRING GUIDE	5	16

PARTS INDEX

Part Number	Description	Pg.	Ref. No.
23-27024	SPACER, SPLINE - PROPELLER SHAFT	51	76
23-30676A1	BUSHING ASSEMBLY, SHIFT SHAFT	45	19
23-30677	BUSHING, NYLON - SHIFT CONTROL SHAFT	23	22
23-30678	BUSHING, NYLON - SHIFT SHAFT	23	10
23-30977	SPACER, PULLEY SCREW	5	10
23-31011	BUSHING, NYLON - THROTTLE CONTROL HOUSING	25	2
23-33462	BUSHING, NYLON - SHAFT AND GEAR (THROTTLE CONTROL HOUSING)	25	9
23-34237	COLLAR, GUIDE - PROPELLER SHAFT	49	74
23-45170	SLEEVE, GUIDE - WATER INLET TUBE	47	45
23-45482	SPACER, SHEAVE SHAFT	5	20
23-46406	BUSHING, STATOR PLATE CONTROL LEVER	25	20
23-59621	SPACER, CLAMP BRACKET STUD	39	12
24-20099	SPRING, COMPRESSION - FRONT COVER RELEASE BUTTON	3	13
24-23067	SPRING, ADAPTOR STEM	21	20
24-29340A1	SPRING, STARTER REWIND	5	15
24-33479	SPRING, CAM FOLLOWER	49	52
24-34731	SPRING, STATOR HOLD DOWN	27	7
24-39598	SPRING, TORSION - FRONT COVER LATCH HOOK	3	22
24-39627	SPRING, DETENT - MOUNTING BRACKET	23	7
24-39675	SPRING, NEUTRAL SPEED LIMITER FOLLOWER	23	27
24-45823	SPRING, PAUL RETAINER PLATE	5	25
24-47744	SPRING, DETENT - STEERING HANDLE	35	17
24-47968	SPRING, TENSION - CHOKE KNOB AND SHAFT	19	3
24-53373	SPRING, RETAINING - CROSS PIN	49	61
24-61106	SPRING, TORSION - CHOKE SHUTTER TENSION	19	6
25-20081	"O" RING, CRANKCASE TOP	27	2
25-20195	"O" RING, IDLE RELIEF TUBE	43	15
25-20415	"O" RING, ADAPTOR STEM	21	21
25-26802	"O" RING, SHIFT SHAFT BUSHING	45	20
25-26802	"O" RING, UPPER - DRIVE SHAFT	47	49
25-29845	"O" RING, SWIVEL BRACKET	39	20
25-29845	"O" RING, SWIVEL BRACKET	39	20
25-33465	"O" RING, BEARING CARRIER	49	67
25-33466	"O" RING, WATER PUMP BASE	45	28
25-37340	"O" RING, FLYWHEEL NUT	9	7
25-38933	"O" RING, LOWER SHIFT SHAFT	45	17
26-20070	OIL SEAL, WATER PUMP BASE	45	30
26-20070	OIL SEAL, WATER PUMP BODY	47	40
26-25329	SEAL, RUBBER - WATER INLET TUBE	37	3
26-25329	SEAL, WATER PUMP BODY	47	42
26-26805	OIL SEAL, BEARING CARRIER	49	71
26-27163	OIL SEAL, BEARING CARRIER (SPRING LOADED)	49	70
26-30696	OIL SEAL, SHIFT SHAFT BUSHING	45	21
26-33467	OIL SEAL, WATER PUMP BASE (SPRING LOADED)	45	31
26-56394	OIL SEAL, CRANKCASE (LOWER)	29	46
26-56747	OIL SEAL, CRANKCASE TOP (UPPER)	27	5
27-27936	GASKET, TRANSFER PORT COVER	27	33
27-31402	GASKET, CARBURETOR FLANGE	17	37
27-39316	GASKET, BAFFLE PLATE TO MANIFOLD COVER	29	42
27-39401	GASKET, POWERHEAD TO MOUNTING PLATE	37	6
27-39402	GASKET, MOUNTING PLATE TO DRIVE SHAFT HOUSING	37	8
27-39402	GASKET, MOUNTING PLATE TO DRIVE SHAFT HOUSING	43	11
27-39623	GASKET, FACE PLATE TO WATER PUMP BODY (UPPER)	47	35
27-39625	GASKET, WATER PUMP BASE TO FACE PLATE (LOWER)	47	33
27-39626	GASKET, WATER PUMP BASE TO GEAR HOUSING	45	27
27-45088	GASKET, CYLINDER BLOCK TO BAFFLE PLATE	29	40
27-45088A4	GASKET SET	1	-
27-52579	GASKET, CYLINDER BLOCK COVER	29	36
28-20094	KEY, FLYWHEEL	31	12
28-20094	KEY, FLYWHEEL DRIVE	9	6
28-56661	KEY, IMPELLER DRIVE PART OF DRIVE SHAFT ASSEMBLY	47	37
29-20046	BEARING, NEEDLE - CRANKPIN	33	3

PARTS INDEX

Part Number	Description	Pg.	Ref. No.
30-25398	BEARING, BALL - FORWARD GEAR	49	56
30-25398	BEARING, BALL - REVERSE GEAR	49	64
30-47158	BEARING, BALL - DRIVE SHAFT	45	24
30-54215	BEARING, BALL - CRANKCASE (LOWER)	29	45
30-54215	BEARING, BALL - CRANKCASE TOP (UPPER)	27	3
31-20594	BEARING, ROLLER - CRANKCASE TOP (UPPER)	27	4
31-28157	BEARING, ROLLER - BEARING CARRIER	49	69
31-28157	BEARING, ROLLER - DRIVE SHAFT	45	5
31-28157	BEARING, ROLLER - FORWARD GEAR	49	58
32-34395A1	HOSE, TELL TALE - COWL TO CYLINDER BLOCK (11")	37	20
32-39586	TUBE, WATER OUTLET (SHORT SHAFT)	43	7
32-39587	TUBE, WATER OUTLET (LONG SHAFT)	43	7
32-45054	TUBE, NYLON - IDLE RELIEF TUBE	43	14
32-48019	FUEL LINE, INLET - ADAPTOR TO FUEL PUMP	21	18
32-52742A1	HOSE, FUEL PUMP TO CYLINDER BLOCK (2 1/2")	21	25
32-54429	FUEL LINE, FUEL PUMP TO CARBURETOR (6 1/2')	21	10
32-60584	HOSE, BLEED DRAIN	27	28
33-58194	SPARK PLUG (AC#40FFK)	9	20
34-32038	REED STOP, MAIN BEARING REED VALVES	31	8
34-56704A1	REED SET, CENTER MAIN BEARING (MATCHED)	31	7
35-53596	SCREEN, FILTER - CARBURETOR	19	9
37-61000A72	DECAL SET (ENGINE)	1	-
38-56745	SERIAL PLATE	39	27
39-27841A12	RING, PISTON	33	9
39-28616A12	RING, PISTON (.015 OVERSIZE)	33	9
40-47276	LOCK RING, PISTON PIN	33	8
43-30802	GEAR, SECTOR - SHIFT SHAFT	23	17
43-45189	GEAR, PINION	45	9
43-45227	FORWARD GEAR ASSEMBLY	49	57
43-45229	REVERSE GEAR ASSEMBLY	49	63
43-58972	GEAR, SECTOR - SHIFT CONTROL SHAFT	23	21
43-60852	GEAR, BALL - UNIVERSAL JOINT	35	13
43-61533	GEAR, PINION - THROTTLE CONTROL	25	1
43-61535	SHAFT AND GEAR, THROTTLE	25	4
44-34238A2	PROPELLER SHAFT ASSEMBLY INCLUDES REF #74 ------ A-23-34237	49	62
45-56792A1	DRIVE SHAFT ASSEMBLY (SHORT SHAFT)	45	6
45-56793A1	DRIVE SHAFT ASSEMBLY (LONG SHAFT)	45	6
46-48744A1	WATER PUMP BASE	45	29
46-48749A2	WATER PUMP BODY ASSEMBLY	47	38
46-48749A3	HEAVY DUTY WATER PUMP ASSEMBLY	1	-
47-56780	IMPELLER, WATER PUMP PART OF DRIVE SHAFT ASSEMBLY	47	36
48-33480A1	PROPELLER ASSEMBLY (2 BLADE - ALUMINUM - 11" PITCH)	49	75
48-33482A1	PROPELLER ASSEMBLY (3 BLADE - ALUMINUM - 9" PITCH)	51	75
48-34402A1	PROPELLER ASSEMBLY (2 BLADE - BRONZE - 11" PITCH)	51	75
48-37316A1	PROPELLER ASSEMBLY (3 BLADE - ALUMINUM - 7" PITCH)	51	75
50-22791A1	STARTER CABLE ASSEMBLY	7	37
50-33000A1	RATCHET ASSEMBLY, FLYWHEEL	9	2
50-45952	STARTER SHEAVE ASSEMBLY	5	17
50-47216A2	ELECTRIC STARTER MOTOR ASSEMBLY	1	-
52-53518A1	RATCHET ASSEMBLY, SLIDING CLUTCH	49	59
53-22899	RING, RETAINING - SHIFT SHAFT	45	18
53-23720	RING, RETAINING - UPPER MOUNT	43	22
53-23721	RING, RETAINING - LOWER MOUNT	43	24
53-33463	RING, RETAINING - BALL BEARING	45	25
53-58656	RING, RETIAINING - ROPE GUIDE TO TOP COWL	3	3
54-20387	CLAMP, FUEL PUMP HOSE TO ELBOWS	21	27
54-53557A1	CLIP ASSEMBLY, STATOR HOLD DOWN	27	6
54-56223	CLAMP, BLEED HOSE ATTACHING	27	29
54-59538	CLIP, COIL RETAINING	11	9
54-59539	CLIP, COIL RETAINING	11	10
90-61797	MERC 200 PARTS LIST	1	-

PARTS INDEX

Part Number	Description	Pg.	Ref. No.
92-25234--1	GLUE (BLANKET ADHESIVE)	1	-
237-4474A1	FLYWHEEL ASSEMBLY	9	1
332-2854	NIPPLE, IGNITION COIL	9	18
336-3989	WICK, CAM WIPER - STATER ASSEMBLY	11	17
336-4318A2	MAKER ASSEMBLY, STATOR HOUSING	11	18
336-4458	PLATE, STATOR HOLD DOWN	11	14
336-4460	INSULATOR, CABLE TO CONTACT HOUSING	13	34
336-4463	CONDENSER ASSEMBLY	11	11
336-4467A1	COIL, LOW SPEED	11	8
336-4468A1	COIL, HIGH SPEED	11	8
336-4477A1	STATRO ASSEMBLY	11	13
336-4516A2	IGNITION MODULE ASSEMBLY	11	3
336-4524A1	COVER ASSEMBLY	11	1
336-4528A1	COIL ASSEMBLY, IGNITION	9	10
397-421A3	GROUND WIRE ASS'Y, MOUNTING BRACKET TO STARTER HOUSING	5	31
415-4478	CRANKSHAFT	31	1
534-3267A8	CENTER MAIN BEARING ASSEMBLY	31	2
619-3195A2	CONNECTING ROD ASSEMBLY	33	1
743-3193A2	PISTON AND PISTON PIN ASSEMBLY	33	7
743-3366A2	PISTON AND PISTON PIN ASSEMBLY	33	9
848-4687A3	CYLINDER BLOCK AND CRANKCASE ASSEMBLY	27	12
1022-3567	COVER, CYLINDER BLOCK	29	35
1147-4472A1	CRANKCASE TOP ASSEMBLY	27	1
1343-4183	CARBURETOR ASSEMBLY, COMPLETE (KA-25A)	15	1
1399-110A1	FLOAT ASSEMBLY	15	2
1399-1133	COVER, FLOAT BOWL	15	9
1399-1135	COVER, STRAINER	15	16
1399-1457	JET, MAIN FUEL (.057)	15	31
1399-1459	JET, MAIN FUEL (.059) - STANDARD	15	31
1399-1461	JET, MAIN FUEL (.061)	15	31
1399-1473	INLET NEEDLE, SEAT AND GASKET	15	6
1399-1655	JET, MAIN FUEL (.055)	15	31
1399-1713	SCREW, IDLE ADJUSTMENT	15	35
1399-2012	SHAFT, THROTTLE	15	21
1399-2015	GASKET AND PACKING SET	17	36
1399-3032	>SHUTTER, THROTTLE	15	25
1399-3938	SCREEN, FILTER	15	14
1399-4255	REPAIR PARTS KIT	17	36
1427-3293A1	CLAMP BRACKET ASSEMBLY	39	1
1461-2683A2	SWIVEL BRACKET ASSEMBLY	39	19
1461-4752A2	SWIVEL BRACKET ASSEMBLY	39	19
1560-4690A2	DRIVE SHAFT HOUSING ASSEMBLY (LONG SHAFT)	43	1
1561-4691A2	DRIVE SHAFT HOUSING, ASSEMBLY (SHORT SHAFT)	43	1
1562-4692	SADDLE	43	20
1627-4404A4	GEAR HOUSING ASSEMBLY COMPLETE (SHORT SHAFT)	49	-
1627-4404A4	GEAR HOUSING ASSEMBLY, COMPLETE (SHORT SHAFT)	45	-
1627-4404A5	GEAR HOUSING ASSEMBLY COMPLETE (LONG SHAFT)	49	-
1627-4404A5	GEAR HOUSING ASSEMBLY, COMPLETE (LONG SHAFT)	45	-
1627-4404A6	GEAR HOUSING ASSEMBLY	45	1
1627-4404A6	GEAR HOUSING ASSEMBLY	49	-
1627-4404A6	GEAR HOUSING ASSEMBLY	49	-
2129-4636A2	BOTTOM COWL ASSEMBLY	37	9
2130-4361A2	TOP COWL ASSEMBLY	3	1
2133-2706A5	WRAP AROUND COWL ASSEMBLY, COMPLETE	3	8
2727-2666A8	FRONT COVER ASSEMBLY, COMPLETE	3	17